Cordex 48-650W Integrated Shelf Systems:

19" Shelf with CXCI and Distribution, 1950W Max
23" Shelf with CXCI and Distribution, 2600W Max

Installation & Operation Manual

Part # 030-822-J0

Effective: 11/2012

member of The alpha Group™

Your Power Solutions Partner

Cordex 48-650W Integrated Shelf Systems:

19" Shelf with CXCI and Distribution, 1950W Max

23" Shelf with CXCI and Distribution, 2600W Max

030-822-J0 Rev A

The following documents and drawings are included in this manual to provide the necessary information required for installation, operation and fault diagnosis of the unit:

• Specifications, Rectifier:	**010-604-B1 (010-570-B1 non-RoHS)**
• Specifications, 23" Shelf:	**030-815-B1**
• Specifications, 19" Shelf:	**030-822-B1**
• Specifications, CXCI:	**707-492-B1 (707-420-B1 non-RoHS)**
• CSA/NRTL Equivalence:	**048-554-10**
• Schematic Drawing, 23" Shelf:	**030-722-05 (RoHS: 030-815-05)**
• Schematic Drawing, 19" Shelf:	**030-727-05 (RoHS: 030-822-05)**
• Outline Drawing, 23" Shelf:	**030-722-06 (RoHS: 030-815-06)**
• Outline Drawing, 19" Shelf:	**030-727-06 (RoHS: 030-822-06)**
• Customer Connections, 23" Shelf:	**030-722-08 (RoHS: 030-815-08)**
• Customer Connections, 19" Shelf:	**030-727-08 (RoHS: 030-822-08)**

IMPORTANT SAFETY INSTRUCTIONS

SAVE THESE INSTRUCTIONS

1. Please read this manual prior to use to become familiar with the product's numerous features and operating procedures. To obtain a maximum degree of safety, follow the sequences as outlined.

2. This manual provides warnings and special notes for the user:

    a. Points that are vital to the proper operation of the product or the safety of the operator are indicated by the heading: **WARNING**.

    b. A notation that is in ***Bold Italic*** typeface covers points that are important to the performance or ease of use of the product.

3. Before using the product, read all instructions and cautionary markings on the product and any equipment connected to the product.

4. Do not expose the product to rain or snow; install only in a clean, dry environment.

5. **CAUTION** – Unless otherwise noted, use of an attachment not recommended or sold by the product manufacturer may result in a risk of fire, electric shock, or injury to persons.

6. **CAUTION** – Do not operate the product if it has received a sharp blow, it has been dropped, or otherwise damaged in any way – return it to a qualified service center for repair.

7. **CAUTION** – Do not disassemble the product – call our qualified service centers for servicing. Incorrect reassembling may result in a risk of electrical shock or fire.

TABLE OF CONTENTS

1 Introduction

1.1 Scope of the Manual

This instruction manual explains the installation, interconnection, and operation of the following shelves:

- Cordex 48-650W integrated 23" 2RU shelf system with up to 2600W output power
- Cordex 48-650W integrated 19" 2RU shelf system with up to 1950W output power

Both shelves have front access connections and distribution.

1.2 Product Overview

Designed specifically for restricted space installations, these 48Vdc power and distribution systems incorporate the reliable 48V 650W Cordex rectifier modules and a complete front access design, allowing for all customer connections in front of the rack channel. The 23" rack mount power system accomodates up to four rectifiers, a Cordex integrated system controller (CXCI), with breaker and GMT fuse distribution in a compact 2RU package. The 19" rack mount power system accomodates up to three rectifiers, a Cordex integrated system controller (CXCI), with breaker and GMT fuse distribution in a compact 2RU package.

Cordex rectifier modules use a high frequency, switched mode conversion technique to provide a fully regulated and isolated DC output from the AC mains. There are two Cordex 48-650W rectifier models from which to choose, the input of model #010-604-20 (non-RoHS #010-570-20) is universal to allow use on 120/208/220/240Vac 50/60Hz electrical service. Model #010-571-20 (non-RoHS) is 120Vac only.

Rectifier power modules are “hot swappable” meaning they can be inserted or removed from the shelf without cutting power to or from the system or the load.

Additional power modules can be included with the system at the time of ordering or added after the shelf has been installed.

The shelf rectifier system is designed to operate with the Alpha Cordex CXCI (integrated version of the CXC controller); which is built into the rectifier system shelf.
Details for installation and wiring are provided in the respective chapters of this documentation package.

All models of the CXC allow the user to set up, control and monitor the entire power system and ancillary components from one central, easy-to-use source: your web browser. The CXCI model does not have a touch screen display; therefore, system setup and management is performed exclusively with the web interface.
Details of controller operation are provided in the current version software manual.

The distribution component utilizes up to four bullet-type breakers and up to ten GMT fuse positions. The distribution module also allows for termination of two battery strings.

Figure 1–Cordex 48-650W integrated 23" 2 RU shelf system with front-access connections

(illustration only and may not match your installation)

1.3 Part Numbers and List Options

This product is available to order under the following part numbers and list options:

Description	Part Number/List Option
Cordex 48-650W 23", 6" offset (mid) mounting, 2RU shelf for systems up to 2600W	030-815-20
[equipped to receive one CXCI controller and up to four CXRC 48-650W rectifiers]	*List 0
Cordex 48-650W 19", 6" offset (mid) mounting, 2RU shelf for systems up to 1950W	030-822-20
[equipped to receive one CXCI controller and up to three CXRC 48-650W rectifiers] (030-727-20 non-RoHS)	*List 0
48Vdc output	*List 2
120Vac input	List 5
240Vac input	List 6
Charcoal finish with white (contrasting) silkscreen	*List 56
Temperature sensor, 1/4" lug, 12 ft.	List 72
Temperature sensor, 3/8" lug, 12 ft.	List 75
Circuit breaker distribution, bullet-type, four load circuit breakers, two battery connections, ten GMT fuse positions	List 80
Load disconnect	List 86
Battery disconnect	List 87
Two line cords without plugs, 3m each	List 89
Rectifier blank plate	List 90
CXCI controller	*List 99
Breaker, mid-trip, 5A	List 100
Breaker, mid-trip, 10A	List 101
Breaker, mid-trip, 20A	List 102
Breaker, mid-trip, 30A	List 103
Breaker, mid-trip, 40A	List 104
Breaker, mid-trip, 50A	List 105
Breaker, mid-trip, 60A	List 106
Replacement CXCI controller	747-439-20-041
Rectifier blank plate	613-465-W3
Breaker, AM-type mid-trip plug-in, 5A	470-302-10
Breaker, AM-type mid-trip plug-in, 10A	470-303-10
Breaker, AM-type mid-trip plug-in, 20A	470-305-10
Breaker, AM-type mid-trip plug-in, 30A	470-307-10
Breaker, AM-type mid-trip plug-in, 40A	470-309-10
Breaker, AM-type mid-trip plug-in, 50A	470-311-10
Cordex 48-650W rectifier power module, 120Vac, 208-240Vac universal input(010-570-20 non-RoHS)	010-604-20
[500W @ 120Vac, 650W @ 208-240Vac]	
Cordex 48-650W rectifier power module, 120Vac input (010-571-20 non-RoHS)	010-605-20
Basic module	*List 0
48Vdc output	*List 2
Charcoal finish with white (contrasting) silkscreen	*List 56
Paralleling diode (Oring MOSFET) for operation without battery	List 82
Replacement MOV pack, 120V	707-382-20-040
Replacement MOV pack, 240V	707-382-20-041
Cordex DC Modem (complete with Alpha cable)	018-585-20

* Default option

The above information is valid at the time of publication. Consult factory for up-to-date ordering information.

2 Features

2.1 Front Access Shelf

The 19" and 23" power and distribution shelves have been designed to allow for all operation and customer connections to be performed in front of the rack channel.

2.1.1 AC Input

The left side of the shelf system contains a removable metal cover with 7/8" holes for 1/2" strain relief fittings for dual AC line cord input. Fittings are supplied with line cord option. Connection is made via screw terminal blocks for 120/240Vac input.

2.1.2 CXCI Connections

Next to the CXCI, on the left side of the shelf, are terminal block connections for the system control I/O; such as, digital signals, analog inputs, and alarm relay outputs.

illustration only and may not exactly match your installation

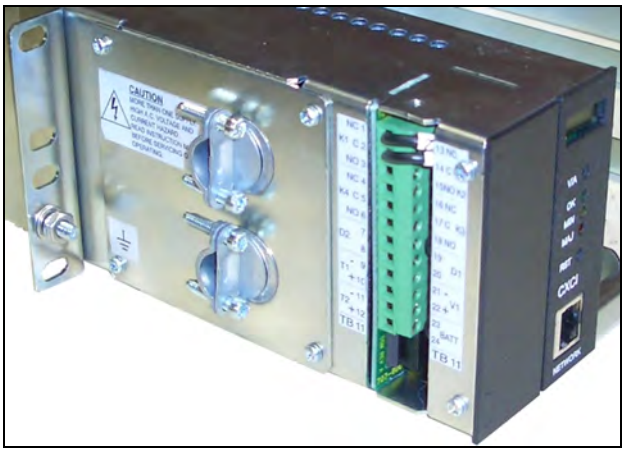

Figure 2–Cordex 48-650W (2600W system) AC input and signal connections

2.1.3 Distribution Module

The shelf incorporates a distribution module for DC breaker/fuse output as well as battery connections. The module includes support for up to four AM plug-in breakers and ten GMT fuse positions. Two battery landing positions and a site ground are also provided.

This module contains a unique sliding connection point system to allow for the several dual-hole lug terminations in a compact space. *See Wiring and Connections chapter of this manual for more details.*

illustration only and may not exactly match your installation

Figure 3–Cordex 48-650W (2600W system) breakers and fuses

2.2 Cordex Integrated System Controller (CXCI)

The Cordex CXCI integrated system controller is mounted in the rectifier system shelf and brings advanced monitoring technology to the Cordex series of rectifiers. This compact system controller is designed for seamless operation and set up of Alpha power systems and is equipped with the complete range of Cordex software features, including the following:

- Designed to communicate directly with Cordex rectifiers
- Includes battery temperature compensation charging
- Battery performance diagnostics
- Provides local and remote communications
- User definable alarms
- Daily logging of power system events and system statistics.

The CXCI includes a web server providing easy set up and monitoring using an Internet connection with the standard Windows Internet Explorer browser.

The data-logging feature allows the user to capture data from multiple inputs, for AC/DC voltages, load/battery current, cell voltages and temperatures (automatically for up to 16 user defined logs). Typical applications of the CXCI logging include power system details, thermal performance of outdoor enclosures, battery cell specifics, or mains variations captured by an AC voltage watchdog.

A built-in audio speaker sounds an intermittent tone during active alarms.

The input/output (I/O) board houses a series of terminal connections.

NOTE: *Refer to the controller software manual for settings for the CXCI.*

2.3 System Controller Front Panel

The CXCI has a 4-digit display for monitoring system voltage (V) and current (A). A pushbutton toggle switch allows the user to alternate the display reading.

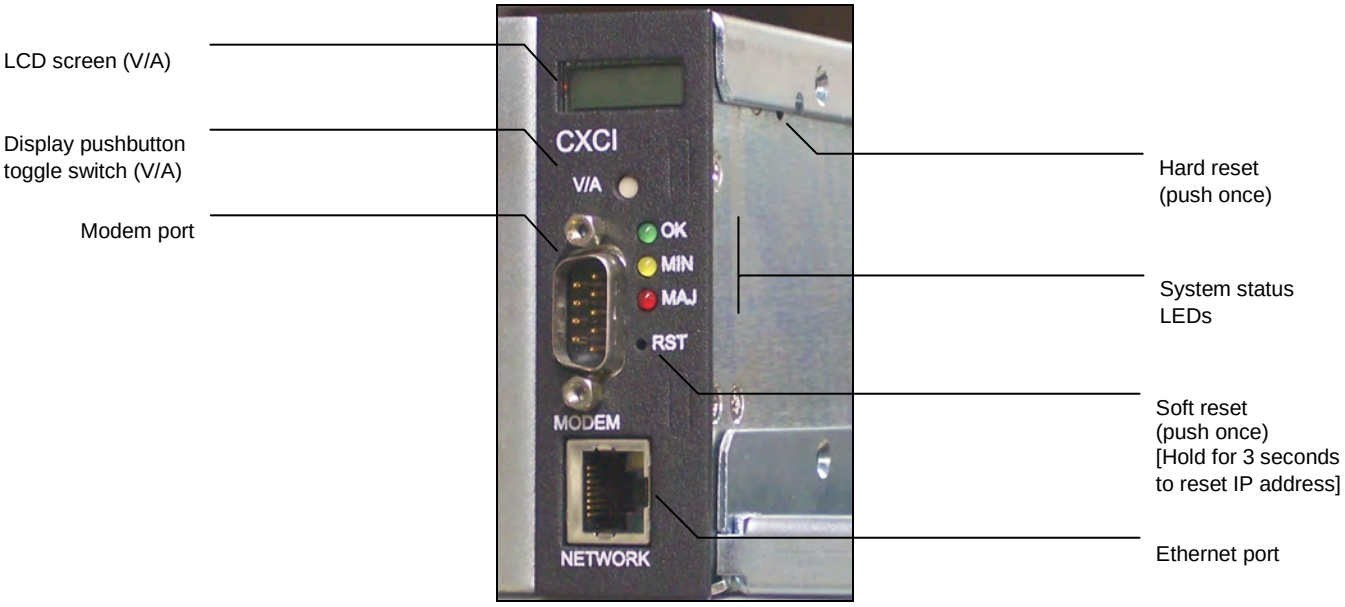

Figure 4–Cordex CXCI model system controller front panel

(Photo is for reference only – subject to installation requirements)

Details of controller operation are provided in the current version software manual.

2.3.1 LEDs

The CXC has three LEDs located on the front panel. These are used to display the alarm status of the power system, CXC progress and status during startup, file transfers and lamp tests.

2.3.1.1 Alarm Conditions

The CXC illuminates the LED that corresponds to the system alarm status. The following show the corresponding alarm status for each LED color:

Green – OK, no alarms present
Yellow – Minor alarm is present (no major alarms)
Red – Major alarm is present.

Only one LED is illuminated at a time during alarm conditions.

2.3.1.2 Progress and Status Indication

The LEDs are also used in the following situations:

Base unit validation – all three LEDs are on at the same time.
File transfer – when recovering from invalid firmware application – the red LED is illuminated.
Lamp Test – all three LEDs flash on and off at the same time for 2 seconds.

2.3.2 Reset

A reset button is located on the front panel for restarting the CXC's microprocessor.

NOTE: *Refer also to the software manual – always select the Reset menu item before pressing the reset button.*

See Section 7.4 for more information on CXC Reset functions.

2.3.3 Modem Port

The Modem port is designed for CXCI connection to a user supplied modem via a front panel DB-9 connector (Figure 4) and a straight through cable. See Alpha Technologies' Cordex DC Modem #018-585-20.

2.3.4 Ethernet Port

The Ethernet port is designed for CXC connection to a user supplied network (TCP/IP secured by user) via a front panel RJ-45 jack (Figure 4) and a standard network cable.

Local access (e.g. laptop computer) is also possible from the Ethernet port connection using a standard network crossover cable.

2.4 Analog Input Channels

2.4.1 Voltage Inputs

Two voltage input channels, V1 and V2, provide monitoring of discharge and charge voltage. The CXC software is pre-configured to monitor V1 for load voltage and V2 for battery voltage. V2 (wired internally) is used as the system reference for rectifier float voltage, low voltage disconnect (LVD), system high voltage alarm, and system low voltage alarm.

2.4.2 Current Inputs

The CXC software is pre-configured to monitor I1 for load current wired internally to the system current shunt.

2.4.3 Temperature Inputs

Two temperature input channels, T1 and T2, provide monitoring of battery temperature and temperature compensation (temp comp) or room/ambient temperature. A voltage is supplied to these terminals to power the temperature sensors.

2.5 Digital Input Channels

The CXCI can accommodate up to two (2) channels and can monitor digital alarm/control signals from rectifiers, converters and many other types of equipment. See Section 5.9.2.

2.6 Alarm and Control Output Relays

The CXCI contains four (4) Form C digital alarm output relays to extend alarms and control external apparatus. Each internally generated alarm or control signal may be mapped to any one of the relays, or, several signals may be mapped to just one relay or none at all. See Section 5.9.3.

2.7 Network Connection and Remote Communications

The Cordex system can be set up, monitored and tested via ETHERNET 10/100 Base-T serial data connection. The communication protocol supports a web interface. All alarming and control of Cordex rectifiers is accomplished with a CXC via a CAN bus.

A step-by-step connection wizard – provided to establish remote communications with your CXC – is available via the Alpha website (www.alpha.ca).

2.8 Rectifier Front Panel

Figure 5–Cordex 48-650W rectifier front panel

2.8.1 LEDs

The front panel LEDs provide rectifier status summary and help to locate a specific module under CXC control.

2.8.1.1 OK

The top LED (green) is on when AC is within valid range and the rectifier is delivering power to the load.

The LED turns off when AC has failed or when the rectifier is off; e.g., when commanded via the CXC. AC voltage is invalid if the AC Mains Low or AC Mains High alarm is active.

2.8.1.2 ALM (Alarm)

The bottom LED (red) is on continuously in the event of an active Module Fail alarm.

The LED will flash (~2Hz) when a minor alarm is detected.

The LED remains off in the absence of an alarm.

2.8.1.3 LED Activity During 'Locate Module' Command from CXC

When the **Locate Module** command has been received from the CXC, the LEDs will behave in a distinctly different way so that the rectifier is easier to visually identify among adjacent rectifiers.

This state is entered when commanded via the CXC. The LEDs will flash in a distinct pattern repeating every 2 seconds.

2.8.1.4 LED Activity During Firmware Upload

When a rectifier firmware upload is in progress, the LEDs will behave in the same way as the **Locate Module** command described above.

2.8.2 Mechanical

A thumbscrew is provided to secure the rectifier into the shelf. During normal operation the rectifier shall be locked into position. A handle (or grip) is incorporated into the front panel to facilitate the removal of the rectifier from the shelf. No special tools are required.

2.9 True Module Fail Alarm

The power modules have a "true" fail alarm. This provides a true indication of the power module's ability to source current. When the module's output current drops below 2.5% of the rated output a low output current condition is detected and the Module Fail detection circuit is activated. This circuit momentarily ramps up the output voltage to determine if the module will source current. If no increase in current is detected, the Module Fail alarm is activated. The module will test once every 60 seconds for the condition until current is detected. Output voltage ramping will cease upon detection of current[1]. A minimum 2.5% load is required to avoid the Ramp Test Fail alarm; this can typically be provided with the parallel system battery. Activation of this alarm could indicate a failed module or a failed load.

NOTE: *For Cordex rectifier systems without batteries (or with a very light load; below 2.5% of rated output) it is recommended that the ramp test be disabled to avoid nuisance alarms. The Ramp Test feature is enabled/disabled via the CXC menu item: Rectifiers, Configure Settings.*

2.10 Heat Dissipation

Heat dissipation is achieved through natural (bottom to top) convection cooling.

2.11 Over Temperature Protection

Each rectifier module is protected in the event of an excessive increase in temperature due to component failure or cooling airflow blockage. During over temperature conditions, the rectifier limits the output power as well as the output current. If temperature continues to increase, a shutdown of the rectifier is initiated. The rectifier shall restart automatically if the temperature has returned to a safe level.

2.12 Wide AC Range

A minor alarm is generated when the AC input voltage drops below specification.

[1] Under normal conditions, a battery connected to the output of the rectifier will draw current when the voltage ramp occurs. Therefore the rectifier fail alarm will not be generated with a battery connected.

For voltages above specifications, power factor and total harmonic distortion may be derated.

2.12.1 Rectifier Module #010-604-20 (010-570-20 non-RoHS)

Output power is reduced linearly between 176Vac and 90Vac to 75% of the rated output power. At a lower voltage the module will shut down and will not restart until the AC is greater than 100Vac.

For voltages between 276Vac and 320Vac, the rectifier may not be operational but shall not suffer any damage.

2.12.2 Rectifier Module 010-571-20 (non-RoHS)

Output power is reduced linearly between 90Vac and 70Vac to 75% of the rated output power. At a lower voltage the module will shut down and will not restart until the AC is greater than 50Vac.

For voltages between 140Vac and 150Vac, the rectifier may not be operational but shall not suffer any damage.

2.13 AC Inrush/Transient Suppression

The inrush current of the rectifier module is limited to the full load steady state line current to prevent surge on the AC line. Modules are also protected from input lightning and transient surges in accordance with IEEE/ANSI C62.41 Category B3.

2.14 Soft Start

To eliminate an instantaneous demand on the AC source, a soft start feature is employed. Soft Start, sometimes referred to as “current walk-in”, works by gradually (up to five seconds) ramping the current limit up from zero to the actual or defined customer setting. The rectifier output voltage is ramped up from the minimum voltage to the float voltage.

2.15 Start Delay

The rectifier modules are equipped with a delay timer in order to stagger start a series of modules to prevent excessive loading of generators upon start up. The built-in timer delays the turn on of the module depending on the value selected (up to 120 seconds) via the CXC. A minimum one-second delay is preset to allow charging of the input capacitors.

2.16 Current Limit/Short Circuit Protection

The current limit function determines the maximum output current limit of the rectifier module, regardless of output voltage or power. Maximum output current is limited to a constant value down to short circuit condition. Current limiting can be used to mate the rectifier output current ampacity to the needs of the load and parallel battery to minimize excessive battery recharge current.

The rectifier will sustain a short circuit at the output terminals indefinitely. The maximum short circuit current shall not exceed 105% of the rated full load current.

2.17 Power Limiting

Each rectifier module is designed to limit power output to the module specification. This enables more current to be supplied at lower output voltages, and allows matching of output to the demand of constant power loads, normally seen with telecom equipment.

This feature may also be used for a faster recharge of flooded batteries paralleled with the load.

NOTE: *Current limiting overrides the power-limiting feature.*

2.18 High Voltage Shutdown (HVSD)

This feature provides protection to the load from over voltage conditions originating from the rectifiers. It operates by shutting down the offending rectifier module when a high output voltage condition occurs. Indication is through the red Alarm (Module Fail) LED. Modules will restart automatically; however, if more than three over voltage conditions occur in one minute, the module will latch off and remain shut down until it is reset.

2.19 Battery Eliminator Operation

Rectifier modules maintain all specifications (except where indicated) with or without a battery attached in parallel to the output; however, if a battery or another module supplying DC voltage in parallel is not present, there will be no monitoring or control activity if there is an AC power failure or input fuse failure.

2.19.1 Paralleling Diode (optional)

An optional Oring MOSFET on the output prevents disruption of DC system output power in the event of a rectifier internal fault in systems without batteries.

3 Inspection

3.1 Packing Materials

All Alpha products are shipped in rugged, double walled boxes and suspended via solid inserts to minimize shock that may occur during transportation. Packaging assemblies and methods are tested to International Safe Transit Association standards.

3.1.1 Returns for Service

Save the original shipping container. If the product needs to be returned for service, it should be packaged in its original shipping container. If the original container is unavailable, make sure the product is packed with at least three inches of shock-absorbing material to prevent shipping damage.

NOTE: *Alpha Technologies is not responsible for damage caused by the improper packaging of returned products.*

3.2 Check for Damage

Prior to unpacking the product, note any damage to the shipping container. Unpack the product and inspect the exterior for damage. If any damage is observed contact the carrier immediately.

Continue the inspection for any internal damage. In the unlikely event of internal damage, please inform the carrier and contact Alpha Technologies for advice on the impact of any damage.

Verify that you have all the necessary parts per your order for proper assembly.

4 Installation

This chapter is provided for qualified personnel to install the product in a clean and dry environment.

4.1 Safety Precautions

WARNING
Hazardous voltages are present at the input of power systems. The DC output from the rectifiers and battery system, though not dangerous in voltage, has a high short circuit current capacity that may cause severe burns and electrical arcing.

Before working with any live battery or power system/distribution center, follow these precautions:

- Remove all metallic jewelry; e.g., watches, rings, metal rimmed glasses, necklaces.
- Wear safety glasses with side shields (and prescription lenses if necessary) at all times during installation.

Metallic tools must be insulated.

Follow all applicable local rules and regulations for electrical and battery installations; e.g., CSA, UL, CEC, NEC, OSHA, and local fire codes.

4.2 Shelf Preparation/Mounting

The shelf has been designed for 6" offset (mid) mounting in both a 23" rack (see drawing 030-722-06) and a 19" rack (see drawing 030-727-06).

NOTE: M*ount the shelf in a clean and dry environment. Allow at least 1.75" of free space above and below the unit for unrestricted cooling airflow. 3.5" (2RU) is recommended.*

Mounting brackets accommodate either 1" or 1-3/4" rack spacing. Mount the shelf to the rack using at least two #12 – 24 x 1/2" screws in each bracket. Use a Philips-type screws and screwdriver to eliminate the possibility of slippage and scratching of the unit's exterior. Use washers (such as internal tooth) or special screws that are designed to cut through the painted surface to ensure a good chassis ground.

4.3 Module Insertion/Removal

Insert by placing the module on the shelf bottom and sliding the module into the rear connector (inside of the shelf). Apply pressure on the module handle to engage the rear connector in the shelf receptacle.

NOTE: *It is recommended that the first module be inserted into the front leftmost position using the side of the shelf-mounted controller as a guide. The next module may be inserted using the previous module as a guide.*

Tighten the screw on the bottom of the faceplate to secure the module to the shelf.

NOTE: *Do not force a module into position if it does not seat properly. All modules are keyed to ensure that the correct module (polarity/voltage) type is used.*

To remove a module, loosen the screw on the bottom of the faceplate. Grasp handle and pull out, sliding the module away from the rear connector and out of the shelf.

5 Wiring and Connections

This chapter provides cabling details and notes on cable sizing for DC applications with respect to the shelf.

NOTE: *Refer also to foldout drawings located at the rear of the manual.*

5.1 Safety Precautions

WARNING
Hazardous AC voltages may be present. Ensure power at the AC service panel is off before attempting work on the AC connections. Use a voltmeter to verify the absence of voltage. Clearly mark the correct polarity of the battery leads before commencing work on DC connections.

Refer to the previous (Installation) chapter for additional safety precautions.

5.2 Tools Required

Various tools are essential for product installation. Use this list as a guide:

- Slot head screwdrivers (blade sizes: 1/4", 1/8", 1/16")
- Philips head screwdriver, #2 (tip size 3/16")
- Digital voltmeter equipped with test leads
- Adjustable 24/48Vdc load (optional)
- Cutters and wire strippers
- Crimping tool (optional for large gauge wire)
- Socket and rachet set (Imperial measure)
- Anti-static wrist strap
- Computer (laptop) with Microsoft® Internet Explorer
- Crossover cable RJ-45 (for access using the Ethernet port).

5.3 AC Feeder Protection/Sizing

To maximize system reliability, the AC feed divides the rectifiers into two groups to be supplied by two separate feeds. See customer connections drawing (modules are numbered left to right) at the end of the manual. Top three terminals of TB7 feed modules 1 and 2. Lower three terminals of TB7 feed modules 3 and 4.

The input of model #010-604-20 (non-RoHS #010-570-20) is universal to allow use on 120/208/220/240Vac 50/60Hz electrical service. Model #010-605-20 (non-RoHS #010-571-20) is 120Vac only.

It is recommended for each feed to use a dedicated protection feeder breaker located at the AC distribution panel. The feeder breaker can also act as the disconnect device for the connected modules.

Rectifier model	Voltage	Number of Rectifiers on AC Feed	Circuit Breaker Exact Value to Use (A)	90 deg. C Wire Gauge to use at 30 deg. C ambient
010-605-20 (010-571-20 non RoHS)	120Vac	1	15	#14 AWG (2.5mm^2)
		2	20	#12 AWG (4mm^2)
010-604-20 (010-570-20 non RoHS)	120Vac	1 or 2	15	#14 AWG (2.5mm^2)
	240Vac	1 or 2	15	#12 AWG (4mm^2)

Table A–Recommended AC supply configuration

5.4 AC Input

CAUTION: AC input wires should be routed in flexible or rigid conduit as far away as possible from the DC power wires to minimize EMI disturbances.

If the shelf is factory-equipped with the optional line cord, proceed to the next section.

For a 23" rack, refer to Figure 6 and customer connections drawing 030-722-08.

For a 19" rack, refer to Figure 6 and customer connections drawing 030-727-08.

Remove the metal cover from the side of the shelf to expose the wireway for the input terminal blocks.

Attach the conduit retainers to the wireway hole(s) and route the AC cables through. Secure the wires to the AC input and chassis ground terminals as required. Tighten the cable connector to the AC cable (conduit similar).

Replace cover once all connections have been completed.

Figure 6–Cordex 48-650W AC input (cover removed) and signal connections

(illustration only and may not exactly match your installation)

5.5 Calculating Output Wire Size Requirements

Wire size is calculated by first determining the appropriate maximum voltage drop requirement. Using the formula below calculate the CMA wire size requirement. Determine the size and number of conductors required to satisfy the CMA requirement.

CMA = (A x LF x K) / AVD, where:

CMA = Cross section of wire in circular MIL area
A = Ultimate drain in amps
LF = Conductor loop feet
K = 11.1 constant factor for commercial (TW type) copper wire
AVD = Allowable voltage drop

Check again that the ampacity rating of the cable meets the requirement for the installation application. Consult local electrical codes (NEC, CEC, etc.) for guidelines. If required, increase the size of the cable to meet the code.

5.6 DC Output

DC cable connections to the system are made within, or just outside, the integrated distribution module located on the right side of the shelf (recall Figures 1 and 3). To ensure proper access to connections, install DC cables in the sequence described in this section.

WARNING
Leave cables disconnected at battery and verify output polarity using a voltmeter. Make battery connections only after all other wiring is completed.

DC output wire shall be UL approved XHHW or RHH/RHW (for Canadian users, RW90 Type).

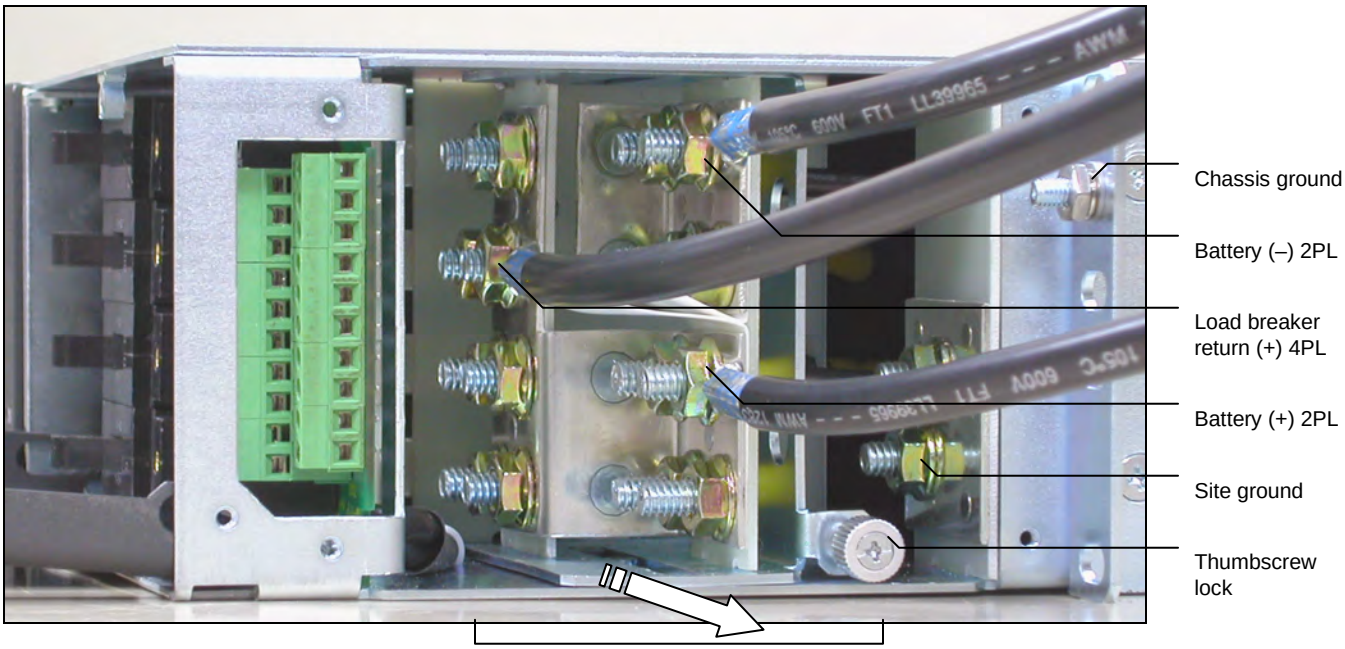

Figure 7–DC output connections (23" rack)

(illustration only and may not exactly match your installation)

NOTE: *Cabling must be done with enough slack to allow the distribution assembly to be locked into place.*

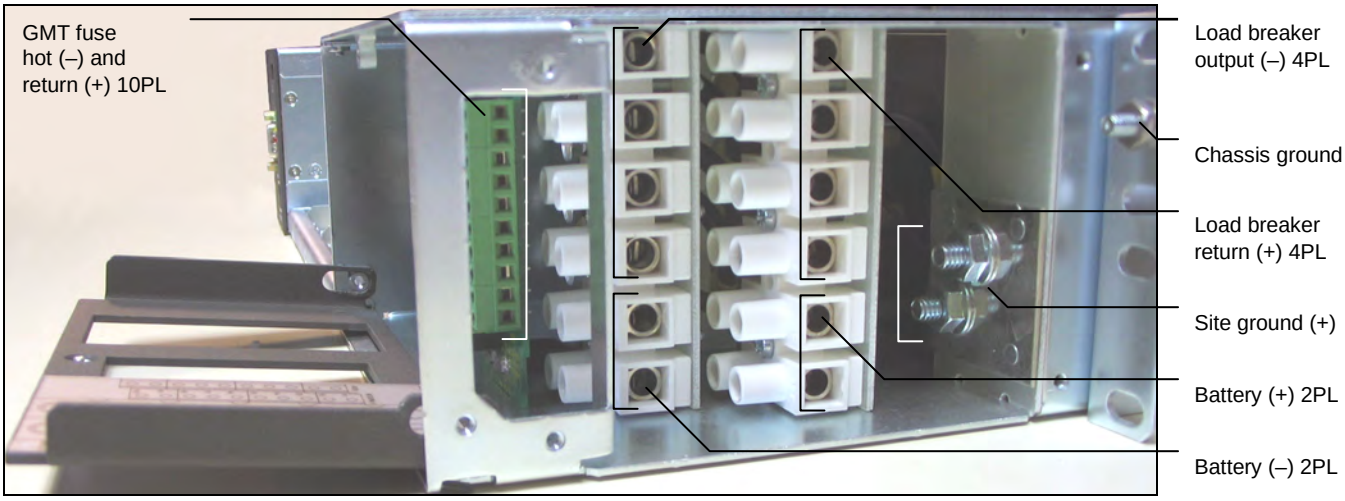

Figure 8–DC output connections (19" rack)

(illustration only and may not exactly match your installation)

5.6.1 Chassis and Site Ground Connections

WARNING
For safety reasons, ensure the system is properly bonded to the building's ground grid.

Both the shelf chassis ground (via power system chassis ground) and common return shall be connected to the site ground to ensure correct operation of the system and to prevent drifting floating analog (especially current) readings.

The chassis ground connection is located on the center mount rack bracket. Connect to the #10-32 stud using single-hole lug and hardware as provided.

The system site ground is located within the distribution module to the left of the chassis ground location (shown in Figure 7 and Figure 8). The two studs are oriented at a 45 degree angle which requires a 1/4" on 5/8" center lug.

5.6.2 Battery Connections

23" Rack

There are connection points for two strings of batteries. Via the thumbscrew lock, disengage part of the distribution assembly to slide it out the right side of the shelf as far as necessary (Figure 7).

Connect the battery (+) cabling to the bottom set of studs and the battery (–) cabling to the upper set. Lugs required are 1/4" on 5/8" centers. Refer also to Figure 7 with respect to the battery cables and the connection points positioned for proper access.

19" Rack

There are connection points for two strings of batteries. Reference Figure 8 with regard to the connection points positioned for proper access. The battery (+) cabling must be made first as the battery (–) cabling will restrict access to the battery (+).

5.6.3 Breaker Ground Connections

The load breaker return (+) for each of the four breakers are also found on the same part of the (sliding) distribution assembly.

Connect to the breaker (ground) returns using 1/4" on 5/8" center lugs.

Slide the connection point assembly back into the distribution module and secure with the thumbscrew lock (Figure 9). Note the cable(s) and the connection points positioned for proper access.

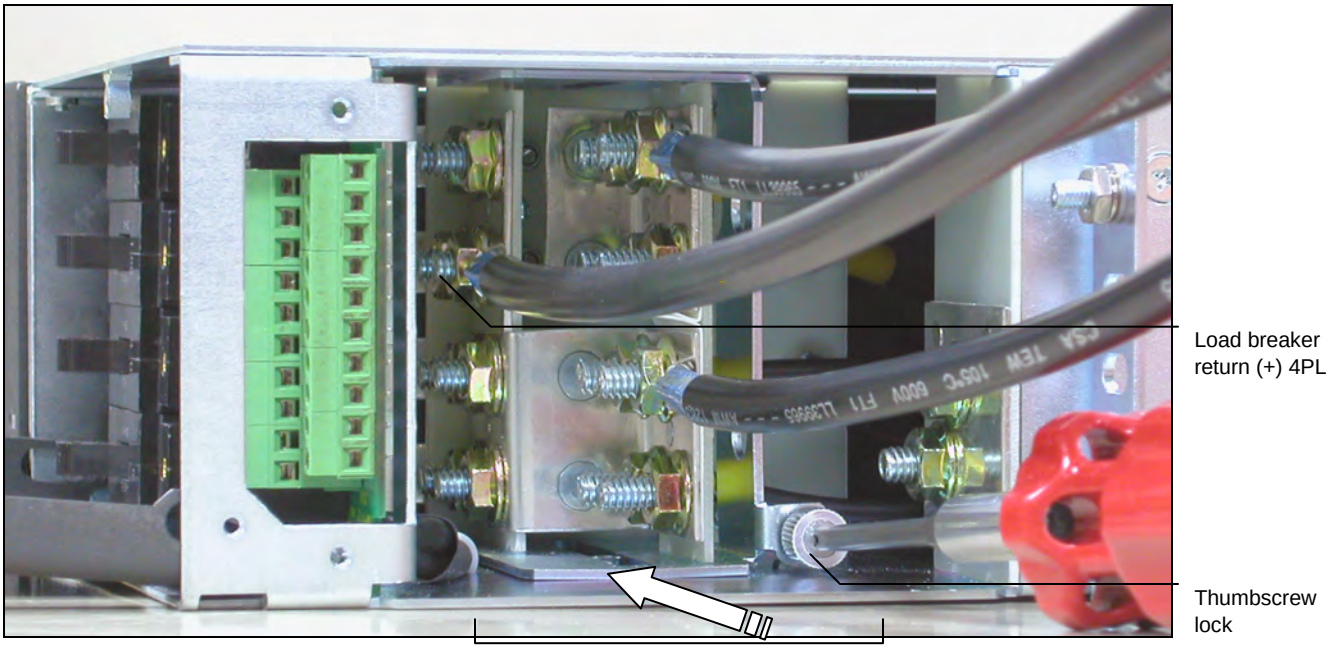

A Philips or slotted head screwdriver may be needed to secure the thumbscrew lock

Figure 9–Breaker ground connections

(illustration only and may not exactly match your installation)

5.6.4 Breaker Hot Connections

Connect to the four load breaker hot (–) termination pairs using 1/4" on 5/8" center lugs (Figure 10).

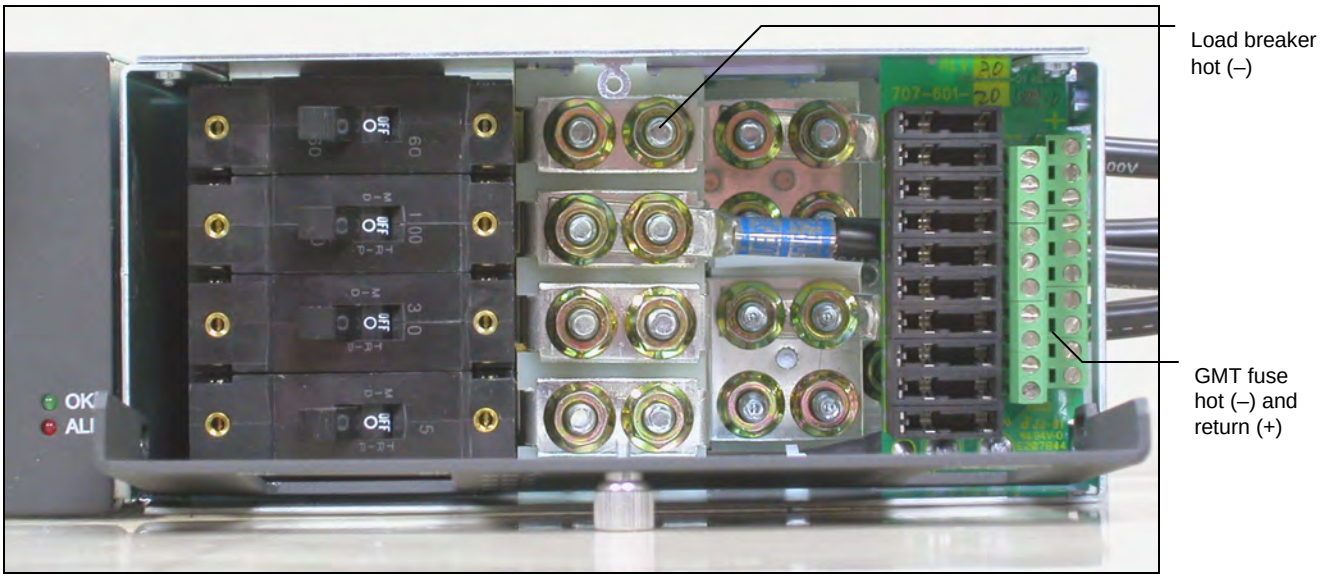

Figure 10–Front view of distribution module (cover removed)

(illustration only and may not exactly match your installation)

5.6.5 GMT Fuse Distribution

The ten (10) GMT-style fuses and the associated control terminal blocks are accessible from the front panel of the distribution module (Figure 10).

Connect via screw terminations, hot (–) and return (+), for each fuse position.

5.7 CAN Out Port

A single CAN Out port, for communications with CAN-enabled equipment (nodes), is located on the shelf front.

Daisy-chain from node to node (CAN OUT of one node to CAN IN of another) as necessary and ensure that only the last node is terminated.

NOTE: *This system has a limit of twelve Cordex 650W rectifiers; they do not have self-powered CAN Bus nodes.*

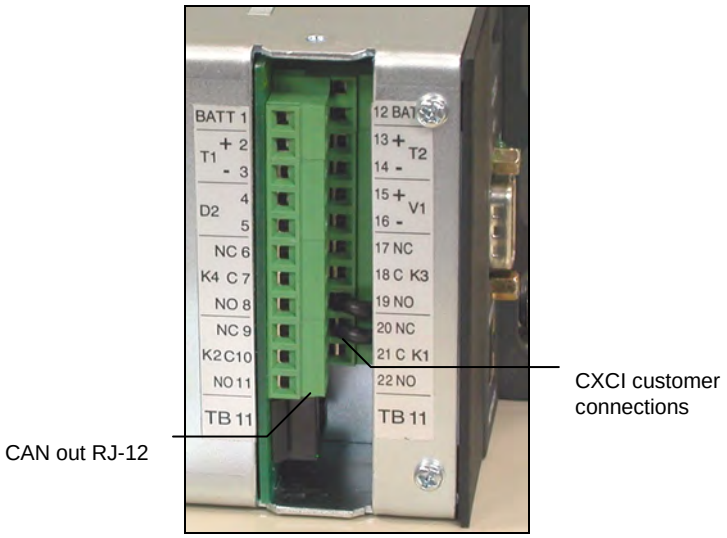

Figure 11–Cordex 48-650W CAN and signal connections

(illustration only and may not exactly match your installation)

5.8 Network Connection and Remote Communications via CXCI

The Cordex system can be set up, monitored and tested via modem or ETHERNET 10/100 Base-T serial data connection. The communication protocol supports a web interface. Some standard scenarios are described below:

5.8.1 Modem Port (Straight Through Cable)

The Modem port is designed for CXCI connection to the Alpha Technologies' Cordex DC Modem (#018-585-20) via a front panel DB-9 connector.

Connect to the CXCI from the modem with the Alpha-supplied DB-9 cable.

CAUTION: Do not connect anything other than the Alpha modem and Alpha-supplied DB-9 cable to the D-sub port on the front of the CXCI.

5.8.2 Ethernet Port for Network Connection (Standard Network Cable)

The Ethernet port is designed for CXCI connection to a user supplied network (TCP/IP secured by user) via a front panel RJ-45 jack.

Connect to the CXCI using a standard network cable. Pinouts are shown in drawings 030-722-08 and 030-727-08.

5.8.3 Ethernet Port for Local Connection (Crossover Cable)

Local access (e.g. laptop computer) is also possible from the Ethernet port connection using a standard network crossover cable.

5.9 Signal Wiring Connections

For terminal block connections, the recommended wire sizes are 0.129 to 1.5mm^2 (#26 to #16 AWG) for the temperature range of 0 to 50 deg. C (as per UL/CSA). Control and sense wires shall be UL approved Style 1015 (for Canadian users, TEW type).

CAUTION: to reduce risk of fire, use only 0.129mm^2 (#26 AWG) or larger wire.

NOTE: *To aid the user with installation, frequent reference is made to drawings located at the rear of this manual. Custom configurations may be detailed within the Alpha power system documentation package.*

The signal cables should be bundled together and routed through the entry holes of the shelf.

5.9.1 Analog Inputs for CXCI

CAUTION: Ensure the correct polarity is used for all input cable terminations.

The analog input channels are used to monitor various types of electrical signals.

Voltage (Input) is 0—60Vdc. Temp Probe is 0—20Vdc with power source.

5.9.1.1 Voltage

Voltage Input #1 (load voltage per CXC software) terminals on the shelf provide connections to an optional secondary voltage input. For example, this can be terminated to the load side of an LVD contactor to monitor load voltage.

Voltage Input #2 (battery voltage per CXC software) is wired internally to the rectifier output voltage of the shelf. This is used as the reference for system alarming (such as high voltage) and control (such as LVD).

The Battery -48V should be connected at the battery system voltage terminal for CXCI reference when a battery disconnect device is used. It is critical to CXCI operation as it ensures a source of power to the CXCI should the disconnect device open the circuit.
For List 87, the Battery -48V is factory wired for internal battery disconnect.

5.9.1.2 Current

Current Input #1 (load current per CXC software) is wired internally to the system current shunt (75A/50mV).

5.9.1.3 Temperature Sensor

Temperature Probe input channels provide connections for up to two temperature sensors. A voltage is supplied to these terminals for sensor measurements.

5.9.2 Digital Inputs for CXCI

The digital input channels (factory-installed) are used to monitor various alarm and control signals. All input channels are voltage activated and accept a bipolar (i.e. negative or positive) DC signal directly.

D1 is wired internally for CB/fuse trip. D2 is available for customer connections as required.

5.9.2.1 Connection Method

Typical Alpha systems use the “reset with Hot and trigger with Ground” connection. The digital input is wired in such a way that the Hot is wired directly into one of the input terminals; e.g., negative input for -48V systems. The other input terminal is wired to the Ground (common) of the system through a relay (dry contact – usually located on the equipment requiring monitoring). This method (see Figure 12) allows the digital input to receive (or not receive) a Ground signal on an alarm.

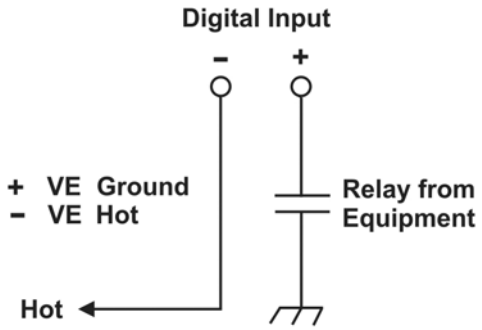

Figure 12–Showing digital input connection method

5.9.2.2 Programming the Digital Input

The digital input channels can be programmed for “active high” or “active low.” Active high indicates “alarm on the presence of a ground signal” and active low indicates “alarm on the removal of a ground signal”. See CXC Software manual for detailed instruction on programming.

Voltage Range (Vdc)	Voltage Level (Vdc) Considered As “0” (Off)	Voltage Level (Vdc) Considered As “1” (On)
0—60 (system voltage setting)	0—3	9—60

Table B–Voltage level definitions for digital inputs

5.9.3 Alarm (Relay) Outputs

Terminals provide contacts for extending various alarm or control signals. Each relay output can be wired for NO or NC operation during an alarm or control condition. See Figure 13.

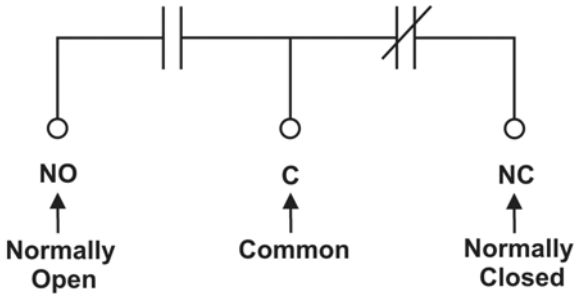

Figure 13–Showing relay connections

Relays can be programmed to energize or de-energize during an alarm condition (see CXC Software manual). When the CXCI reset button is pressed or power is lost, all relays de-energize.

These relays could be used for additional external LVD contactor control; however, this would not provide the redundant LVD control as with the assigned output pins described below.

5.9.4 LVD Control (Load Disconnect or Battery Disconnect) Option

The disconnect option is controlled by and connected internally to relay K1.

5.9.4.1 LVD Inhibit

Should it be necessary to remove the CXCI, the customer connection board (on the front of the shelf) provides shorting pins (JP2) to inhibit (or override) the LVD Control function. See drawing 030-722-08 next to TB11, pin 22, of the customer connections.

If the LVD is controlled on NC contacts (factory default for LVD option), then JP2 pins 1 and 2 must be shorted together to maintain LVD operation. If the LVD is controlled on NO contacts, then pins 2 and 3 must be shorted together. For normal operation, the factory-supplied shorting jumper should be left on pins 3 and 4.

5.9.5 LVD Control Alternative

The LVD Control functions can be hardwired directly from an alarm output relay to an external LVD contactor (or panel). See Controls Menu Defaults in the CXC Software manual.

6 Operation

6.1 Main Rectifier States

Rectifier operation can be broken up into five main states:

1. Off,
2. Start delay,
3. Soft start,
4. Normal operation,
5. Turning off.

Each state is characterized as being distinct and necessary for the operation of the rectifier. These states are briefly described below.

6.1.1 Off State

The rectifier will be in the Off state immediately after power is applied to the rectifier or after a rectifier shutdown. The shutdown source may be remote or local shutdown, AC shutdown, OVP or thermal shutdown.

When the rectifier is in this state the DC-DC converter is turned off and the CXC will be monitoring its inputs for the proper conditions to begin the start up sequence.

When the conditions have been met for the rectifier to start up, it will transition to the Start Delay state.

6.1.2 Start Delay State

When the rectifier is in the Start Delay state, the DC-DC converter is held off and still not sourcing power and is waiting for a given amount of time before transitioning to the next state.

When in this state, the CXC continues to monitor its inputs.

After the Start Delay state the rectifier will transition to the Soft Start state.

NOTE: *Soft start, or current walk-in, gradually increases the voltage and current output of the rectifier upon startup. This is done to reduce the instantaneous load on the AC source.*

6.1.3 Soft Start State

When the Soft Start state is entered, the rectifier will be turned on and the output voltage and output current will be gradually increased. If a load is present, the rectifier will begin to source power.

When the voltage and current limit ramps have finished, the rectifier will transition to the Normal Operation state.

6.1.4 Normal Operation State

The Normal Operation state is the state that the rectifier will be in performing all of the rectifier functions and features specified herein.

From this state, the only valid transition is to the Turning Off state. This transition will happen if the rectifier is required to shut down.

6.1.5 Turning Off State

The Turning Off state is entered because a short delay is required before the rectifier actually turns off to take care of any initialization requirements.

When this short delay has elapsed, a transition to the Off state is made.

6.2 Main Rectifier Modes

In addition to Main Rectifier States, there is a set of Main Rectifier Modes. These modes can be divided into two categories as follows:

6.2.1 Output Voltage Modes

Voltage modes can be thought of as modes that, under software control, can directly adjust the output voltage. The qualification of ‘under software control’ is made because there are processes that occur in the rectifier that can change the output voltage that do not adjust the output voltage directly (such as the rectifier being in current limit).

The following table lists the five Output Voltage Modes and a description of when they are active:

Output Voltage Modes	Active when…
Float	Output voltage is set to the float voltage setting.
Equalize	Output voltage is set to the equalize voltage setting.
Battery Test	Output voltage is set to the battery test voltage setting.
Safe	Output voltage is set to the safe mode voltage setting.
Manual Test	Output voltage can be manually adjusted outside of the standard adjustment ranges.

Table C–Output voltage modes

6.2.2 Output Current/Power Modes

These modes directly affect the output current and power.

The following table lists the four Output Current/Power Modes and a description of when they are active:

Output Current/Power Mode	Active when…
Temperature foldback mode	Output current and power limit have been reduced due to high temperature of the heatsink or internal ambient temperature sensor.
AC foldback mode	Output current and power limit have been reduced due to low AC input voltage. *Note: this will reduce the risk of tripping an AC breaker due to increased AC current draw as the AC voltage decreases.*
Short circuit foldback mode	Output current limit has been reduced due to a short circuit at the output.
Internal fault foldback mode	Output current limit has been reduced due to an internal fault.

Table D–Output current/power modes

6.3 Can Bus Communications

The CAN bus is used for communication between the rectifier and CXC.

The communication between the rectifier and CXC consists of commands and data transfer that are used during the operation of the power system to configure the rectifier with system settings and to monitor rectifier status.

6.4 Factory Ranges and Defaults

The following table lists the rectifier settings/ranges/defaults; changes are made via the CXC:

Setting	Range (minimum to maximum)	Default
Float (FL) Voltage	48 – 58V	54V
Equalize (EQ) Voltage	50 – 58V	55V
Battery Test (BT) Voltage	44 – 52V	46V
OVP	See note below – 59V	57V
Current Limit (CL)	23 – 100%	100%
Power Limit (PL)	0 – 100%	100%
Module Start Delay	0 – 250s	1s
System Start Delay	0 – 600s	0s
Low Voltage Alarm (LVA)	42 – 52V	44V
High Voltage Alarm (HVA)	52 – 59V	55.5V
EQ Timeout	1 – 2399h	30h
BT Timeout	1 – 250h	8h
Softstart Ramp-rate	Normal/Fast	Normal
CL/PL Alarm	Enable/Disable	Disable
Remote Shutdown	Enable/Disable	Enable
Ramp Test	Enable/Disable	Enable

Table E–Cordex 48-650W factory ranges and defaults

NOTE: *OVP cannot be set below the present system/FL/EQ/BT voltage setting or the safe mode voltage of 51.4V.*

7 System Startup

After completing the shelf wiring and installation, perform the following startup and test procedure to ensure proper operation:

7.1 Check System Connections

- Ensure AC is off, battery is disconnected, and all power modules are removed from the shelf.
- Triple check the polarity of all connections.

7.2 Verify AC and Power the Shelf

- Install one power module.
- Verify AC input voltage is correct and turn on the corresponding AC input feeder breaker.
- The power module OK LED should illuminate after a preset start delay.
- Using the CXCI, test functionality of various module alarms and controls.

7.3 Check Battery Polarity and Connect

- Verify correct battery polarity using a voltmeter (ensuring no cells or batteries are reversed).
- Connect battery as required to the output of the system or turn on battery breaker.
- Install remaining power modules.
- In the adjustments menu of the CXCI (web browser), set Float and Equalize voltage to the levels specified by the battery manufacturer.
- Using the CXCI, test functionality of various module alarms and controls. In addition, perform a load test with the system using a resistive load box as needed.

7.4 CXC Reset

7.4.1 Soft Reset

The reset button located on the front panel of the CXCI is for restarting the microprocessor. When pressed momentarily, the unit beeps twice then resets. The front-panel LEDs will illuminate temporarily, but will extinguish after the system has finished its 15-second self-test.

7.4.2 IP Address Reset

To reset the IP address, press and hold the front panel reset button for three seconds. The CXCI unit beeps three times, IP resets (to 10.10.10.201) and DHCP is disabled. The settings are saved and the unit then resets.

This will allow local access; e.g., with a laptop and a standard network crossover cable. See the current version of the software manual for details.

7.4.3 Hard Reset

There is a second reset button located to the right of the front panel on the side of the CXCI. This may be used to restart the microprocessor in the event that the front panel (soft) reset button fails to operate as described above.

CAUTION: Use of hard reset may cause loss of data.

To access the hard reset button, remove the rectifier module adjacent to the CXCI.

7.4.4 Time Settings

The CXCI, upon startup*, will set the time based on the following:

- Attempt to synchcronize with the NTP server (see www.NTP.org).
- Retrieve the last time stamp from the Event Log.
- Retrieve the last time stamp from the Statistics Log.
- Set the time to 2005-01-01 midnight.

* Whenever the unit is reset or power is completely removed from the CXCI.

8 Maintenance

Although very little maintenance is required with Alpha systems, routine checks and adjustments are recommended to ensure optimum system performance. Qualified service personnel should do repairs.

The following table lists a few maintenance procedures for this system. These procedures should be performed at least once a year.

WARNING: HIGH VOLTAGE AND SHOCK HAZARD.

Use extreme care when working inside the shelf while the system is energized.
Do not make contact with live components or parts.

Circuit cards, including RAM chips, can be damaged by static electricity. Always wear a grounded wrist strap when handling or installing circuit cards.

Procedure	Date Completed
Clean ventilation openings	
Inspect all system connections (re-torque as necessary)	
Verify alarm/control settings	
Verify alarm relay operation	

Table F–Sample maintenance log

8.1 CXCI Replacement

1. Write down the CXCI communication information: dynamic or static IP, IP address, and gateway.
2. Connect user laptop to CXCI per software manual; standard network crossover cable to Ethernet port.
3. A step-by-step connection (wizard) application – provided to establish remote communications with your CXC – is available via the Alpha website (www.alphadcpower.com). The CXC Connection Wizard will save your LAN configuration and restore it back when exiting the application.
4. Save CXCI configuration file (see software manual).
5. Bypass system LVD as required; short the pins at JP2 (located above the CAN Out port) to inhibit (or override) the LVD Control function. If the LVD is controlled on NC contacts (factory default for LVD option), then JP2 pins 1 and 2 must be shorted together to maintain LVD operation. If the LVD is controlled on NO contacts, then JP2 pins 2 and 3 must be shorted together. JP2 pin 4 is a neutral/resting position.
6. Ensure rectifier is in the right-most position. Remove rectifier in the left-most position in order to access the side of the CXCI where the mounting screws are located.
7. Remove three mounting screws from the CXCI as shown in Figure 14.

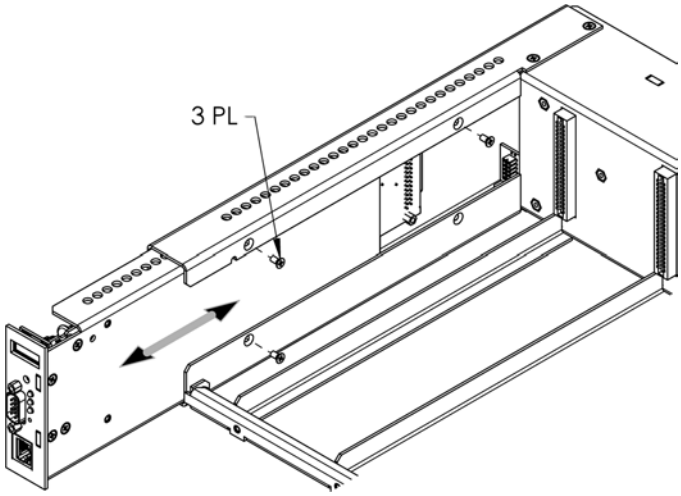

Figure 14–Showing CXCI removal and replacement

8. For CXCI removal/installation, the front panel should not be removed as it is used to grip (with thumb and index finger) along bottom and top edge for removal/insertion. Carefully pull the controller module clear of the backplane and disconnect the DB-25 connector, with ribbon cable, from the back of the CXCI.
9. Install the new CXCI: connect the DB-25, with ribbon cable, to the back of the CXCI. CAUTION - Do not push on the LCD and ensure that the ribbon cable does not become pinched when the controller module is slid back into position.
10. Reinstall the three mounting screws.
11. Review steps 1 through 4 with respect to new installation and upload the saved CXCI configuration file to the new controller.
12. Use a meter to verify the buss voltage and current shunt. Recalibrate as required due to differences in the new CXCI.
13. Replace rectifiers and remove LVD bypass.

8.2 MOV Replacement

The MOVs (Metal Oxide Varistor) are used to protect the power modules from power line surges and the surges caused by lightning strikes. High capacity surges may permanently damage MOVs, which are easily replaced in the field using the following procedure:

1. Shut off the unit and wait five minutes for the output capacitors to discharge.
2. Loosen the thumbscrew that secures the power module to the shelf and remove the module from the shelf.
3. Turn the module around to face the back of the unit and remove the three (3) screws securing the rear grill/cover. Remove the rear cover. See Figure 15:

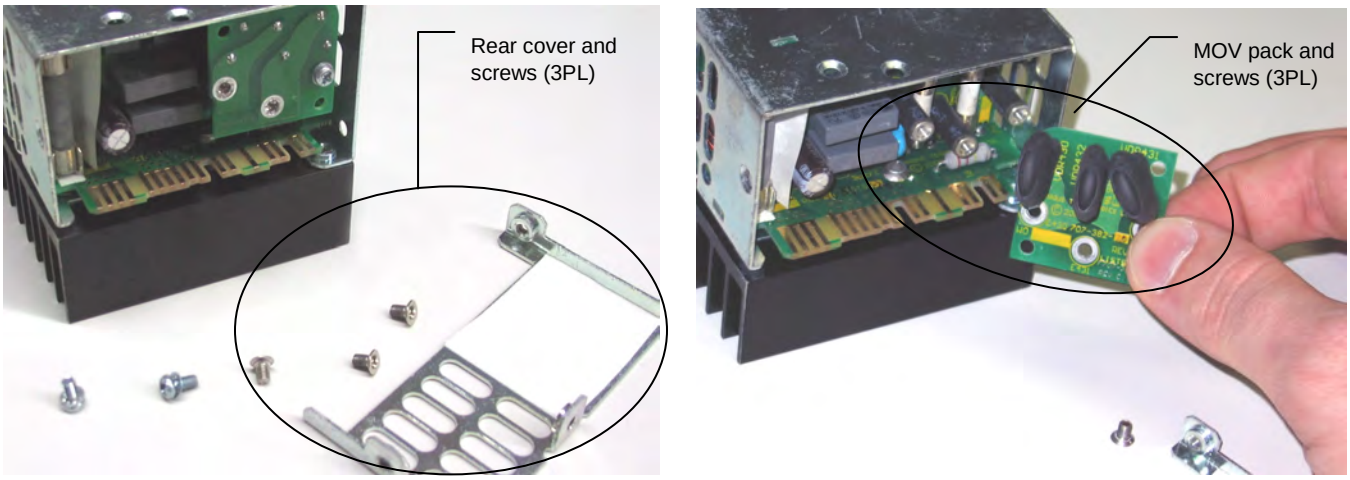

Figure 15–Showing MOV removal and replacement

4. Locate the “MOV pack.” Remove the three (3) screws securing the MOVs and remove.
5. Decontaminate the affected area with flux remover or a similar cleaning compound. This is to remove any metallic particles or carbon, which may have been deposited when the MOV failed.
6. Install the replacement MOV printed circuit board and reassemble the unit following the preceding steps in reverse order.

9 Warranty

Visit http://www.alpha.ca/web2/services-and-support/warranty.html for full warranty information.

9.1 Warranty

Alpha Technologies Ltd. warrants all equipment manufactured by it to be free from defects in parts and labor, for a period of two years from the date of shipment from the factory. The warranty provides for repairing, replacing or issuing credit (at Alpha's discretion) for any equipment manufactured by it and returned by the customer to the factory or other authorized location during the warranty period. There are limitations to this warranty coverage. The warranty does not provide to the customer or other parties any remedies other than the above. It does not provide coverage for any loss of profits, loss of use, costs for removal or installation of defective equipment, damages or consequential damages based upon equipment failure during or after the warranty period. No other obligations are expressed or implied. Warranty also does not cover damage or equipment failure due to cause(s) external to the unit including, but not limited to, environmental conditions, water damage, power surges or any other external influence.

The customer is responsible for all shipping and handling charges. Where products are covered under warranty Alpha will pay the cost of shipping the repaired or replacement unit back to the customer.

10 Acronyms and Definitions

AC	Alternating current
ANSI	American National Standards Institute
AWG	American wire gauge
BTU	British thermal unit
CAN	Controller area network
CEC	Canadian Electrical Code
CSA	Canadian Standards Association
CX	Cordex™ series; e.g., CXC for Cordex System Controller
DC	Direct current
DHCP	Dynamic host configuration protocol
EIA	Electronic Industries Alliance
EMC	Electromagnetic compatibility
EMI	Electromagnetic interference
ERM	Electromagnetic compatibility and radio spectrum matters
ESD	Electrostatic discharge
FCC	Federal Communications Commission (for the USA)
HVSD	High voltage shutdown
IEC	International Electrotechnical Commission
IEEE	Institute of Electrical and Electronics Engineers
LED	Light emitting diode
LVD	Low voltage disconnect
MTBF	Mean time between failures
NC	Normally closed
NEC	National Electrical Code (for the USA)
NO	Normally open
OSHA	Occupational Safety & Health Administration
OVP	Over voltage protection
RAM	Random access memory
RU	Rack unit (1.75")
TCP/IP	Transmission control protocol / internet protocol
THD	Total harmonic distortion
UL	Underwriters Laboratories

Specifications for Alpha's Switched Mode Rectifier Cordex 48-650W

Power Module Output

Voltage:	40.5 to 58Vdc within rated limits
Current:	12A @ 54Vdc nominal (13.5A maximum @ 48V)
Maximum Power: (010-570-20)	650W continuous/module @ 208-240Vac nominal 500W continuous/module @ 120Vac nominal
Maximum Power: (010-571-20)	650W continuous/module @ 120Vac nominal
Static Load Regulation:	Better than ±0.5% for any load change within rated limits
Dynamic Load Regulation:	Better than ±2% for 40% – 90% – 40% (50% load step) [output shall recover to static limits within 2ms]
Static Line Regulation:	Better than ±0.1% for any change in input voltage within rated limits
Dynamic Line Regulation:	Better than ±1% for any change in input voltage within rated limits (output voltage shall recover to static limits within 2ms)
Hold-up Time:	10ms
Time Stability:	≤0.2% per year
Temperature Stability:	≤100ppm/°C over the operating range
Heat Dissipation:	<92 Btu per hour (per rectifier module)
Electrical Noise:	<32dBrnC (voice band) <30mV$_{RMS}$ to 10MHz <150mVp-p to 100MHz <1mV (psophometric)
EMI:	The unit meets requirements of EN55022 (see Standards for more EMC)

In accordance with FCC requirements, we provide the following statement as specified in the FCC guidelines for conformance to Part 15, Class B:

> **NOTE:** *This equipment has been tested and found to comply with the limits for a Class B digital device, pursuant to part 15 of the FCC Rules. These limits are designed to provide reasonable protection against harmful interference in a residential installation. This equipment generates, uses, and can radiate radio frequency energy and, if not installed and used in accordance with the instructions, may cause harmful interference to radio communications. However, there is no guarantee that interference will not occur in a particular installation. If this equipment does cause harmful interference to radio or television reception, which can be determined by turning the equipment off and on, the user is encouraged to try to correct the interference by one or more of the following measures:*
>
> - Reorient or relocate the receiving antenna.
> - Increase the separation between the equipment and receiver.
> - Connect the equipment into an outlet on a circuit different from that to which the receiver is connected.
> - Consult the dealer or an experienced radio/TV technician for help.

Any changes or modifications to this equipment not expressly described in this manual could void the FCC compliance.

Printed in Canada. © 2012 Alpha Technologies Ltd. ALPHA and CORDEX are trademarks of Alpha Technologies Ltd. All Rights Reserved.

Power Module Input

Voltage (010-570-20):	120/208/220/240Vac (continuous operation 90-276Vac) Low: 176 to 90Vac (de-rated linearly to 75% output power) High: 276 to 320Vac (de-rated power factor)
Voltage (010-571-20):	100/110/120Vac (continuous operation 70-140Vac) Low: 90 to 70Vac (de-rated linearly to 75% output power) High: 140 to 150Vac (de-rated power factor)
Frequency:	50/60Hz nominal (45 to 70Hz)
Current (010-570-20):	3.0 to 3.5A (nominal Vac) 4.9A maximum @150Vac
Current (010-571-20):	6.0 to 6.6A (nominal Vac) 8.1A maximum @88Vac
Power Factor:	>0.99 at nominal conditions and 50-100% load; >0.98 at nominal conditions and 30-50% load
Protection:	10kA-interrupting capacity fuses in active and neutral lines
Efficiency:	>91% at nominal conditions and 50-100% load
Inrush Current:	≤ full load steady state current of the rectifier within rated limits
Start-up Ready Time:	<5 seconds (excluding soft start) to complete inrush limit routine and ac measurement (for OK signal)
Start-up Delay:	Programmable up to 120 seconds to enable stagger-start of multiple rectifiers and to minimize the effect on a supply source
Soft Start:	User adjustable to at least 5 seconds (not including start-up delay time) and is determined by output current limit ramp-up
T.H.D. (Current):	<5% at 100% load
Input Transient Suppression:	Meets ANSI/IEEE C62.41 Category B3
Input Leakage Current:	<3.5mA @ 265Vac 60Hz

Environmental

Operating Temperature:	-40 to +65°C (de-rated linearly to 70% output power for ambient temperatures above 50°C; -2% per 1°C) (-40 to 149°F; de-rated linearly to 70% output power for ambient temperatures above 122°F; -1% per 0.9°F)
Storage Temperature:	-40 to +85°C (-40 to 185°F)
Humidity:	0 to 95% non-condensing
Elevation:	-500 to +4000m; derate @ -4°C/1000m above sea level (-1640 feet to 13124 feet; derate @ -7.2°F/3281 feet above sea level)

Printed in Canada. © 2012 Alpha Technologies Ltd. ALPHA and CORDEX are trademarks of Alpha Technologies Ltd. All Rights Reserved.

Miscellaneous

MTBF:	>400,000 hours
Dimensions:	88.4mm H x 71.6mm W x 242mm D (excluding connector) [3.48" H x 2.82" W x 9.53" D]
Weight:	1.4 kg (3 lb.)

Referenced Standards

EN 300 386-2	EMC and ERM; Telecommunication Network Equipment
EN 55022 (CISPR 22)	Information Technology Equipment – Radio Disturbance Characteristics – Limits and Methods of Measurement
EN 61000-3-2	Harmonic Current Emissions
EN 61000-3-3	Voltage Fluctuations and Flicker
EN 61000-4-2	ESD Immunity
EN 61000-4-3	Radiated Electromagnetic Immunity
EN 61000-4-4	Electrical Fast Transient/Burst Immunity
EN 61000-4-5	Power Line Surge Immunity
EN 61000-4-6	Conducted Electromagnetic Immunity
EN 61000-4-11	Voltage Dips, Short Interruptions and Variations
ETS 300 019-1-1	Environmental Conditions; Storage
ETS 300 019-1-2	Environmental Conditions; Transportation
ETS 300 132-2	Power Supply Interface at the Input to Telecommunications Equipment; Operated by Direct Current (DC)
ETS 300 753	Acoustic Noise Emissions
IEC 60950	Safety of Information Technology Equipment, Including Electrical Business Equipment (UL/CSA 60950)

The above information is valid at the time of publication. Consult factory for up-to-date ordering information.
Specifications are subject to change without notice.

Printed in Canada. © 2012 Alpha Technologies Ltd. ALPHA and CORDEX are trademarks of Alpha Technologies Ltd. All Rights Reserved.

Specifications for Alpha's Cordex 48-650W 23" Integrated Shelf System

Basic Unit, Shelf

Maximum Output:	54A, 60Vdc
Recommended Feeder Breaker Single Phase:	20A, #12 AWG [for up to two (2) rectifiers]

Mechanical

Dimensions:	88mm H x 540mm W x 307mm D (rectifier front panel 18mm D) [3.5" H x 21.3" W x 12.1" D (rectifier front panel 0.7" D)]
Mounting*:	23" rack, 6" offset
Weight:	7.2 kg (15.9 lb.)

Connections

AC Input:	Terminal block 0.34 to 6mm^2 (#22 to #10 AWG)
Chassis ground:	#10-32 stud
Communications:	CAN (bus) out RJ-12 offset
Site ground:	1/4" on 5/8" centers
Battery Output:	1/4" on 5/8" centers, two (2) sets per polarity
Load Output:	AM breakers: 1/4" on 5/8" centers GMT fuses: screw terminal 0.129 to 1.5mm^2 (#26 to #16 AWG)
Signal wiring:	Terminal blocks 0.129 to 1.5mm^2 (#26 to #16 AWG)

Safety

EN 60950	Rectifier output shall be rated SELV suitable for connection to TNV-1 circuits
UL	60950-1-2002
CSA	C22.2 No. 60950
CE	EN 60950, CB Scheme 73/23/EEC Low Voltage Directive with amendment 93/68/EEC
Telcordia (Bellcore)	GR-1089-CORE (requirements applicable to rectifier)

* See drawings at the rear of this manual.

The above information is valid at the time of publication. Consult factory for up-to-date ordering information.
Specifications are subject to change without notice.

Printed in Canada. © 2012 Alpha Technologies Ltd. ALPHA and CORDEX are trademarks of Alpha Technologies Ltd. All Rights Reserved.

Specifications for Alpha's Cordex 48-650W 19" Integrated Shelf System

Basic Unit, Shelf

Maximum Output Current:	40.5A @48Vdc (three rectifiers)
Maximum Output Voltage:	58Vdc
Recommended Feeder Breaker Single Phase:	20A, #12 AWG (for up to two rectifiers) 15A, #14 AWG (for one rectifier)

Mechanical

Dimensions:	88mm H x 442mm W x 302mm D (rectifier front panel 18mm D) [3.5" H x 17.4" W x 11.9" D (rectifier front panel 0.7" D)]
Mounting*:	19" rack, 6" offset
Weight:	6.5 kg (14 lb.)

Connections

AC Input:	Terminal blocks, 0.34 to 6mm^2 (#22 to #10 AWG)
Chassis Ground:	#10-32 stud
Communications:	CAN (bus) out RJ-12 offset
Site Ground:	1/4" on 5/8" centers
Battery Output:	Terminal blocks, 16mm^2 (#6 AWG maximum)
Load Output:	AM breakers: terminal blocks, 16mm^2 (#6 AWG maximum) GMT fuses: terminal blocks, 0.129 to 1.5mm^2 (#26 to #16 AWG)
Signal Wiring:	Terminal blocks, 0.129 to 1.5mm^2 (#26 to #16 AWG)

Safety

EN 60950	Rectifier output shall be rated SELV suitable for connection to TNV-1 circuits
UL	60950-1-2002
CSA	C22.2 No. 60950
CE	EN 60950, CB Scheme 73/23/EEC Low Voltage Directive with amendment 93/68/EEC
Telcordia (Bellcore)	GR-1089-CORE (requirements applicable to rectifier)

* See drawings at the rear of this manual.

The above information is valid at the time of publication. Consult factory for up-to-date ordering information.
Specifications are subject to change without notice.

Printed in Canada. © 2012 Alpha Technologies Ltd. ALPHA and CORDEX are trademarks of Alpha Technologies Ltd. All Rights Reserved.

Specifications for Alpha CXCI/CXCI+ Cordex Controller Integrated Model

Basic Unit, CXCI/CXCI+

CXCI Input Voltage:	17 to 65Vdc within rated limits [9 to 65Vdc for shelf systems with 12V rectifiers (List 3)]
CXCI+ Input Voltage:	10 to 65Vdc within rated limits
Current:	<100mA @ 48Vdc <200mA @ 24Vdc
MTBF:	472,000 hours @ 25°C (77°F)
EMC:	The unit meets requirements of: ICES-003 Class B EN 55022 Class B (CISPR 22) EN 61000-4-2 ESD EN 61000-4-3 Radiated Immunity EN 61000-4-4 EFT /Burst EN 61000-4-6 Conducted Immunity FCC Part 15 Class B, FCC Part 68

In accordance with FCC requirements, we provide the following statement as specified in the FCC guidelines for conformance to Part 15, Class B:

> **NOTE:** *This equipment has been tested and found to comply with the limits for a Class B digital device, pursuant to part 15 of the FCC Rules. These limits are designed to provide reasonable protection against harmful interference in a residential installation. This equipment generates, uses, and can radiate radio frequency energy and, if not installed and used in accordance with the instructions, may cause harmful interference to radio communications. However, there is no guarantee that interference will not occur in a particular installation. If this equipment does cause harmful interference to radio or television reception, which can be determined by turning the equipment off and on, the user is encouraged to try to correct the interference by one or more of the following measures:*
>
> - Reorient or relocate the receiving antenna.
> - Increase the separation between the equipment and receiver.
> - Connect the equipment into an outlet on a circuit different from that to which the receiver is connected.
> - Consult the dealer or an experienced radio/TV technician for help.

Any changes or modifications to this equipment not expressly described in this manual could void the FCC compliance.

Environmental

Temperature:	-40 to 65°C standard @ 3000m derate to 55°C @ 4000m (-40 to 149°F derate to 131°F @ 13124ft)
Humidity:	0 to 95% non-condensing
Elevation:	-500 to +4000m (-1640 to 13124 ft)

Printed in Canada. © 2011 Alpha Technologies Ltd. ALPHA and CORDEX are trademarks of Alpha Technologies Ltd. All Rights Reserved.

Hardware Specifications, CXCI/CXCI+

CPU:	Coldfire
Display:	4 digit LCD
Front Panel Controls:	Display pushbutton toggle switch for voltage (V) or current (A) CXCI/CXCI+ reset switch (soft reset button; hold for 3 seconds to reset IP)
LED's:	System OK (Green) Power System Minor Alarm (Yellow) Power System Major Alarm / Controller Fail (Red)
Audio:	Built-in speaker for alarm and popup message tones
Dimensions:	88mm H x 26mm W x 280mm D (3.5" H x 1" W x 11" D)
Weight:	0.34 kg (0.75 lb.)
Mounting:	Integrated on Cordex 2RU series 19" and 23" shelves
Relay Outputs:	Four (4) Form C, 60Vdc 1A maximum
Digital Inputs:	Two (2), 0 to 60Vdc
Analog Inputs:	One (1) DC voltage, 0 to 60Vdc One (1) DC current, ±50mV Two (2) temperature, self-powered Alpha sensor (max 12Vdc)
CXCI Communication Ports:	Ethernet RJ-45, Alpha Modem DB-9, CAN [see shelf specifications]
CXCI+ Communication Ports:	Ethernet RJ-45, CAN [see shelf specifications]

Software Specifications, CXCI/CXCI+

CXCI	Software version 2.05
CXCI+	Software version 3.1x (x indicates the latest release)

Recommended Signal Wire Sizes (as per UL/CSA)

Wire Size Range:	0.14 to 1.50mm^2 (#26 to #16 AWG)
Temperature Range:	0 to 50°C (32 to 122°F)

CAUTION – TO REDUCE RISK OF FIRE, USE ONLY 0.14mm^2 (#26 AWG) OR LARGER WIRE.

The above information is valid at the time of publication. Consult factory for up-to-date ordering information.
Specifications are subject to change without notice.

Printed in Canada. © 2011 Alpha Technologies Ltd. ALPHA and CORDEX are trademarks of Alpha Technologies Ltd. All Rights Reserved.

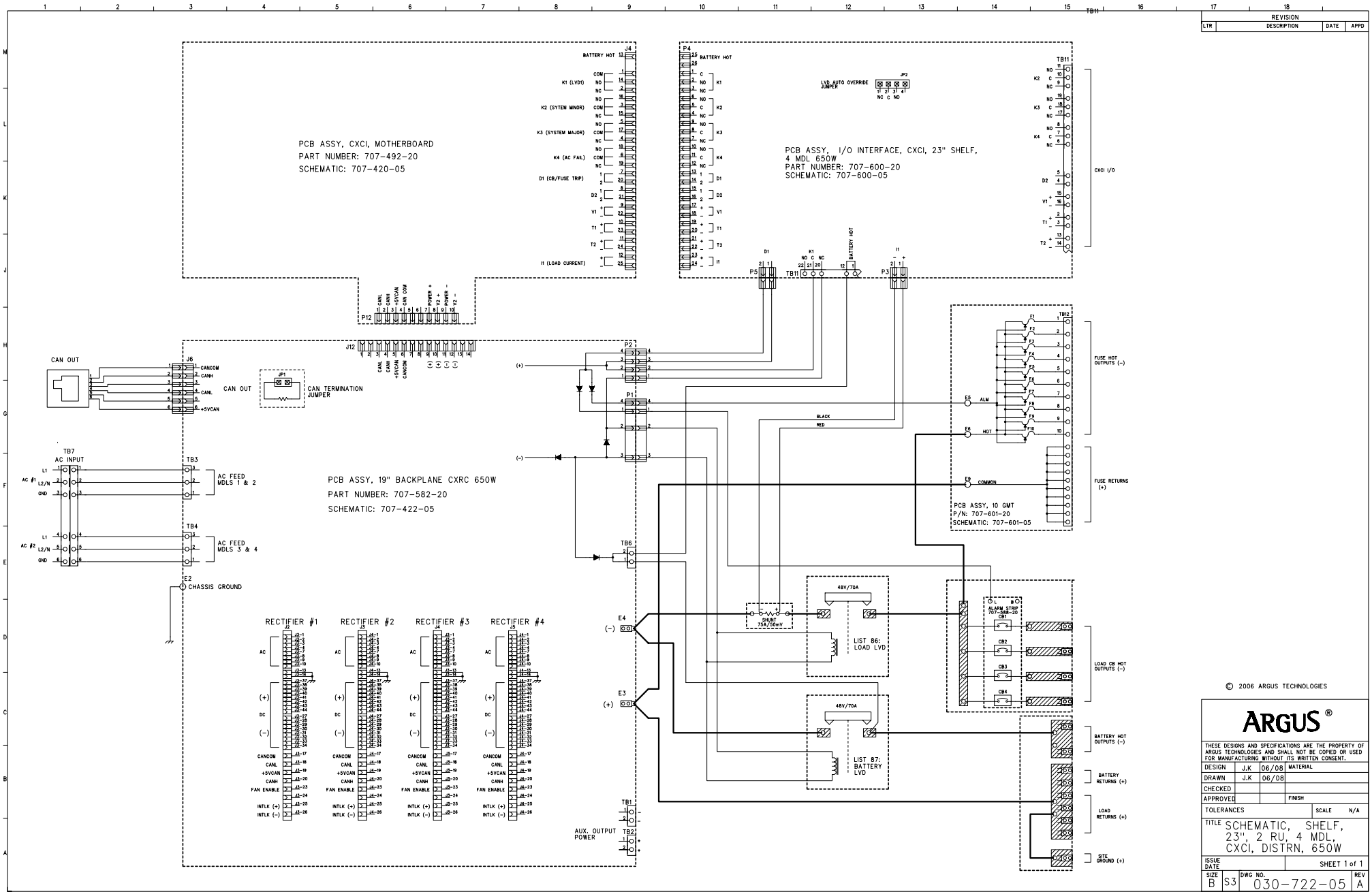

REVISION			
LTR	DESCRIPTION	DATE	APPD

© 2006 ARGUS TECHNOLOGIES

ARGUS®

THESE DESIGNS AND SPECIFICATIONS ARE THE PROPERTY OF ARGUS TECHNOLOGIES AND SHALL NOT BE COPIED OR USED FOR MANUFACTURING WITHOUT ITS WRITTEN CONSENT.

DESIGN	J.K	06/08	MATERIAL
DRAWN	J.K	06/08	
CHECKED			
APPROVED			FINISH
TOLERANCES			SCALE N/A

TITLE SCHEMATIC, SHELF, 23", 2 RU, 4 MDL, CXCI, DISTRN, 650W

ISSUE DATE | SHEET 1 of 1

SIZE B | S3 | DWG NO. 030-722-05 | REV A

REVISIONS				
LTR	DESCRIPTION	REV BY	DATE	APPD

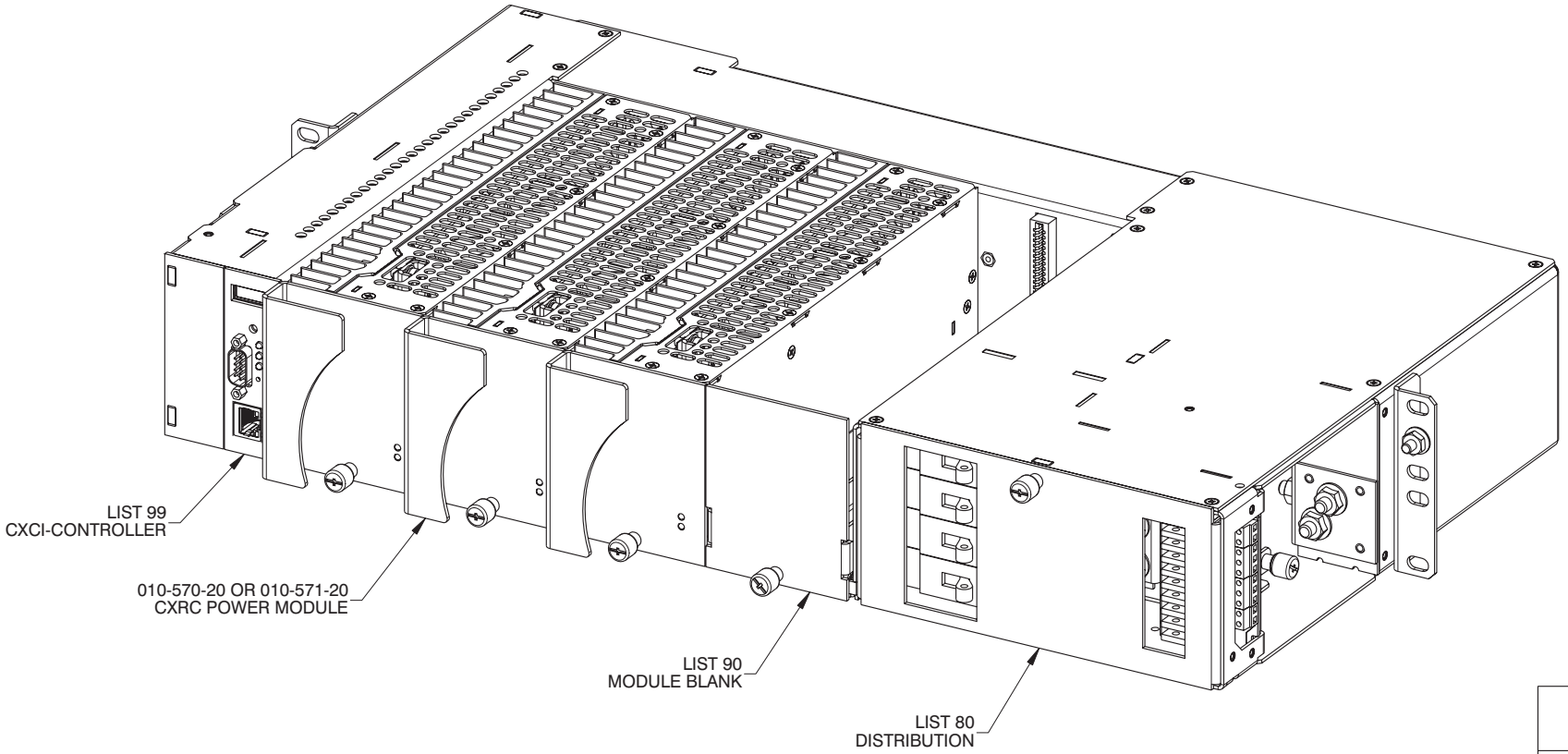

ARGUS

THESE DESIGNS AND SPECIFICATIONS ARE THE PROPERTY OF ARGUS TECHNOLOGIES AND SHALL NOT BE COPIED OR USED FOR MANUFACTURING WITHOUT ITS WRITTEN CONSENT.

DESIGN	RP	2006/11	MATERIAL
DRAWN	RP	2006/11	
CHECKED	RP	2006/11	
APPROVED	JK	2006/11	FINISH

TOLERANCES
X.X ±0.04" [X] ±1mm
X.XX ±0.02" [X.X] ±0.5mm
X.XXX ±0.01" [X.XX] ±0.25mm

PER P.O. and Doc. 070-024-83

SCALE NTS

TITLE
OUTLINE, SHELF, 23" CMNT, 2RU, 4MDL, CXCI, DISTRN, 650W

ISSUE DATE

SHEET 1 OF 2

SIZE	TYPE	DWG NO.	REV
B	D2	030-722-06	A

© 2006 ARGUS TECHNOLOGIES

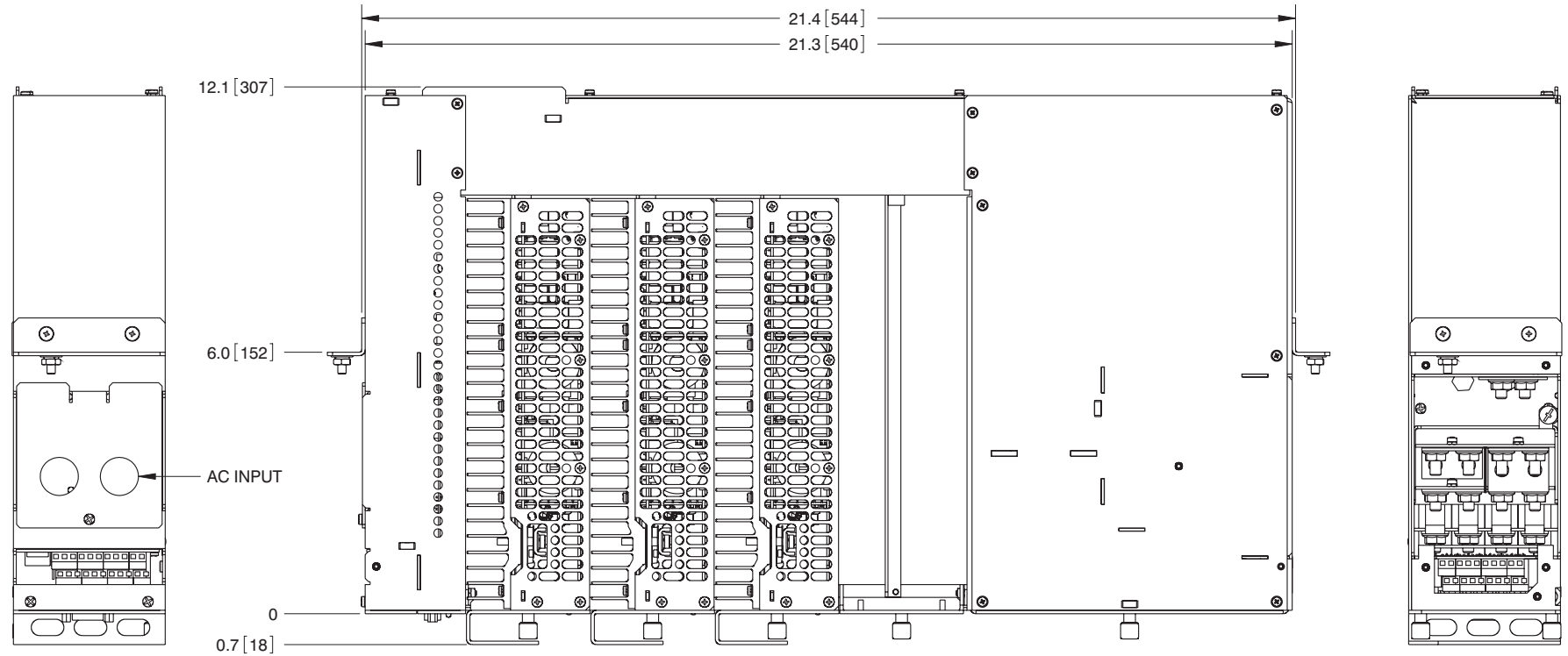

LEFT SIDE VIEW

TOP VIEW

RIGHT SIDE VIEW

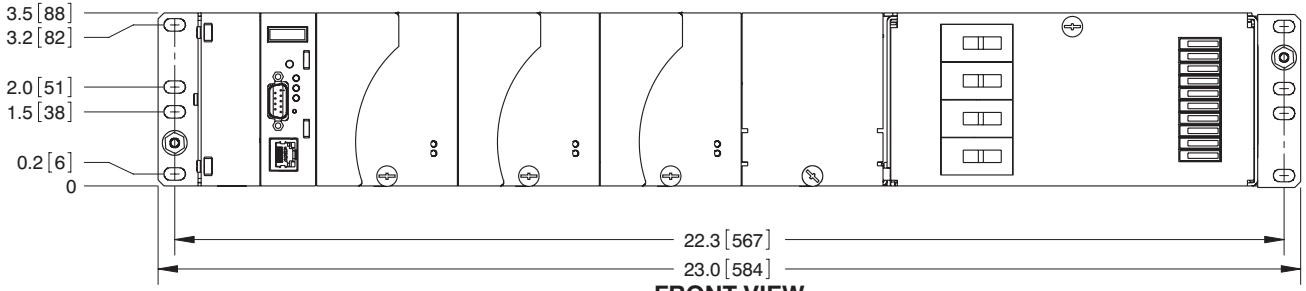

FRONT VIEW

© 2006 ARGUS TECHNOLOGIES

DIMENSIONS ARE IN INCHES WITH METRIC (mm) IN BRACKETS: INCHES [mm]

ARGUS

THESE DESIGNS AND SPECIFICATIONS ARE THE PROPERTY OF ARGUS TECHNOLOGIES AND SHALL NOT BE COPIED OR USED FOR MANUFACTURING WITHOUT ITS WRITTEN CONSENT.

SCALE	NTS
TITLE	OUTLINE, SHELF, 23" CMNT, 2RU, 4MDL, CXCI, DISTRN, 650W
ISSUE DATE	SHEET 2 OF 2
SIZE B / TYPE D2 / DWG NO.	030-722-06 / REV A

REVISIONS				
LTR	DESCRIPTION	REV BY	DATE	APPD
B	UPDATED NOTES	SDW	2008/01	JK

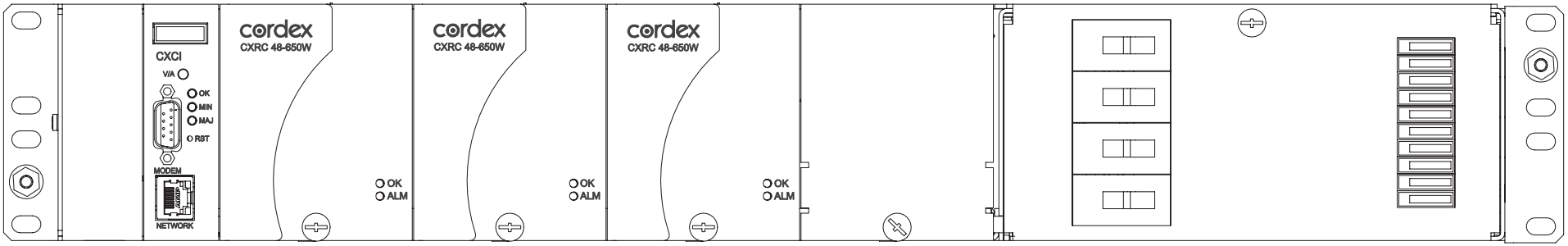

CXCI SUPERVISORY

CORDEX 650W MODULES

MODULE BLANK

4 POS'N LOAD CB / 10 GMT FUSE DISTRIBUTION

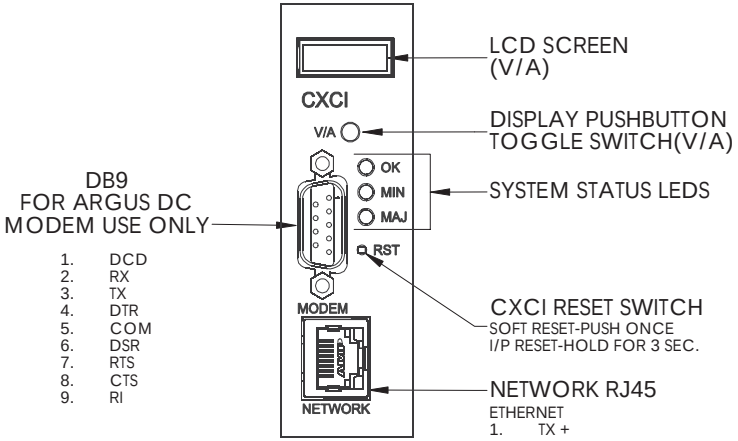

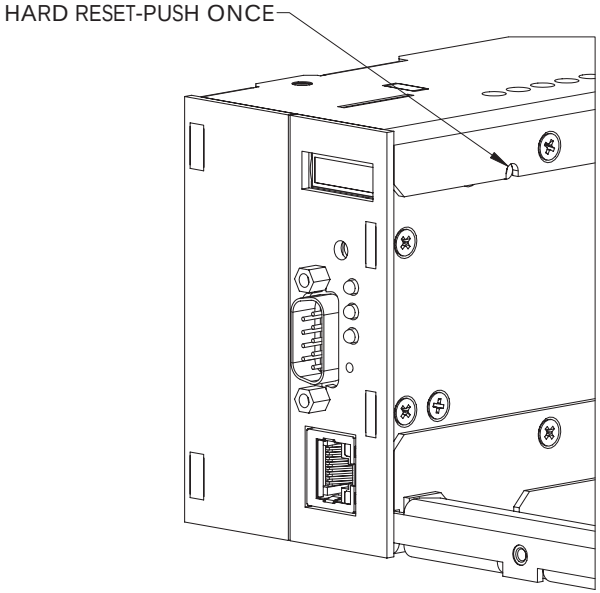

ARGUS

THESE DESIGNS AND SPECIFICATIONS ARE THE PROPERTY OF ARGUS TECHNOLOGIES AND SHALL NOT BE COPIED OR USED FOR MANUFACTURING WITHOUT ITS WRITTEN CONSENT.

DESIGN	RP	2006/11	MATERIAL
DRAWN	RP	2006/11	
CHECKED	RP	2006/11	
APPROVED	JK	2006/11	FINISH

TOLERANCES
X.X ±0.04" [X] ±1mm
X.XX ±0.02" [X.X] ±0.5mm
X.XXX ±0.01" [X.XX] ±0.25mm

SCALE NTS

TITLE
CUST CONN, SHELF, 23" CMNT 2RU, 4MDL, CXCI, DISTRN, 650W

ISSUE DATE

SHEET 1 OF 2

SIZE	TYPE	DWG NO.	REV
B	D2	030-722-08	B

© 2006 ARGUS TECHNOLOGIES

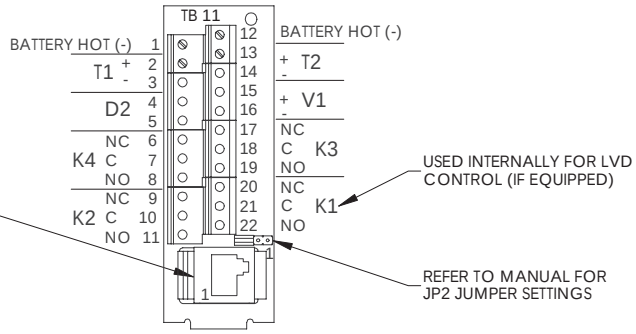

CXCI CUSTOMER CONNECTION PCB DETAIL

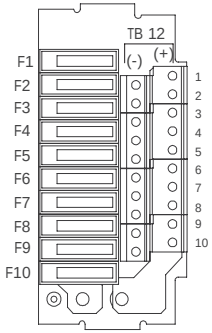

GMT FUSE PCB DETAIL

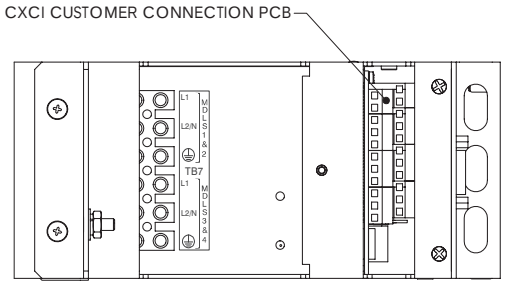

AC INPUT SIDE VIEW
PANEL REMOVED

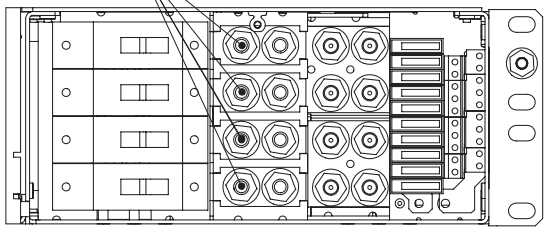

DISTRIBUTION FRONT VIEW
FRONT PANEL HIDDEN

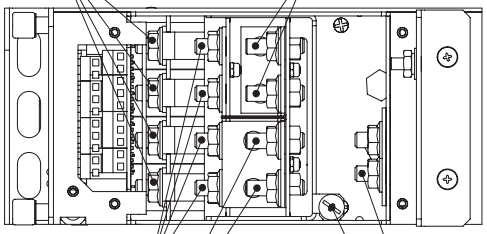

DISTRIBUTION SIDE VIEW

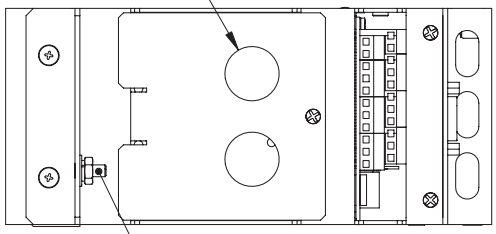

AC INPUT SIDE VIEW

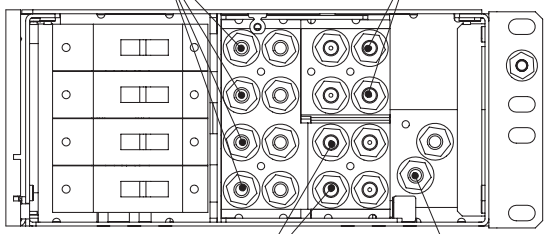

DISTRIBUTION FRONT VIEW
FRONT PANEL, LOAD CB OUTPUTS AND GMT FUSES HIDDEN

© 2006 ARGUS TECHNOLOGIES

ARGUS

THESE DESIGNS AND SPECIFICATIONS ARE THE PROPERTY OF ARGUS TECHNOLOGIES AND SHALL NOT BE COPIED OR USED FOR MANUFACTURING WITHOUT ITS WRITTEN CONSENT.

SCALE	NTS
TITLE	CUST CONN, SHELF, 23" CMNT 2RU, 4MDL, CXCI, DISTRN, 650W
ISSUE DATE	
SHEET	2 OF 2
SIZE	B
TYPE	D2
DWG NO.	030-722-08
REV	B

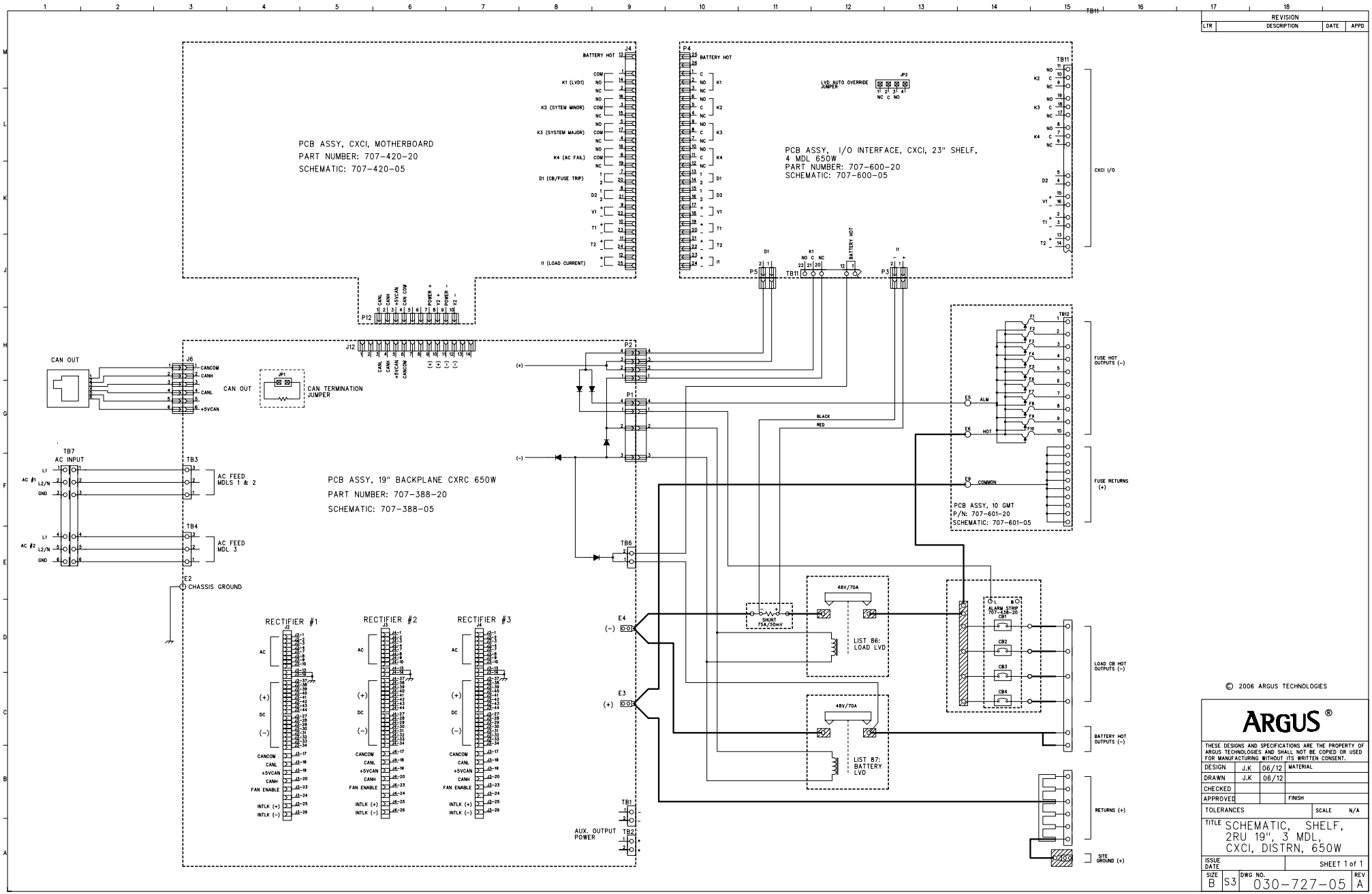
PCB ASSY, CXCI, MOTHERBOARD
PART NUMBER: 707-420-20
SCHEMATIC: 707-420-05
PCB ASSY, I/O INTERFACE, CXCI, 23" SHELF,
4 MDL 650W
PART NUMBER: 707-600-20
SCHEMATIC: 707-600-05
PCB ASSY, 19" BACKPLANE CXRC 650W
PART NUMBER: 707-388-20
SCHEMATIC: 707-388-05
PCB ASSY, 10 GMT
P/N: 707-601-20
SCHEMATIC: 707-601-05
CAN OUT
CAN TERMINATION JUMPER
AC FEED MDLS 1 & 2
AC FEED MDL 3
CHASSIS GROUND
RECTIFIER #1
RECTIFIER #2
RECTIFIER #3
SHUNT 75A/50mV
LIST B6: LOAD LVD
LIST B7: BATTERY LVD
AUX. OUTPUT POWER
CXCI I/O
FUSE HOT OUTPUTS (-)
FUSE RETURNS (+)
LOAD CB HOT OUTPUTS (-)
BATTERY HOT OUTPUTS (-)
RETURNS (+)
SITE GROUND (+)
© 2006 ARGUS TECHNOLOGIES
ARGUS
THESE DESIGNS AND SPECIFICATIONS ARE THE PROPERTY OF ARGUS TECHNOLOGIES AND SHALL NOT BE COPIED OR USED FOR MANUFACTURING WITHOUT ITS WRITTEN CONSENT.
DESIGN J.K 06/12
DRAWN J.K 06/12
TITLE SCHEMATIC, SHELF, 2RU 19", 3 MDL, CXCI, DISTRN, 650W
SHEET 1 of 1
SIZE B S3
DWG NO. 030-727-05
REV A

REVISIONS				
LTR	DESCRIPTION	REV BY	DATE	APPD

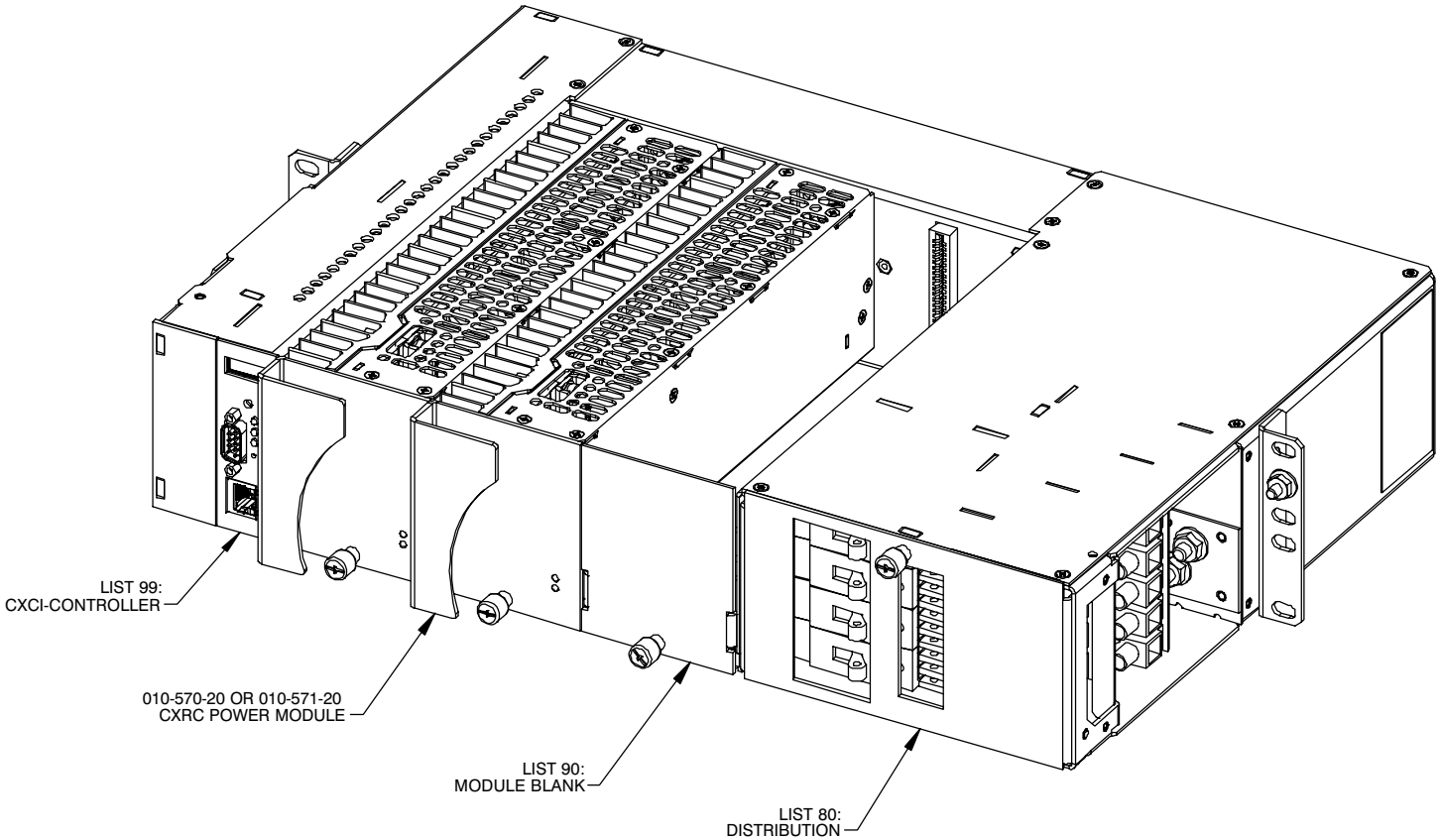

© 2007 ARGUS TECHNOLOGIES

DIMENSIONS ARE IN INCHES WITH METRIC (mm) IN BRACKETS: INCHES [mm]

ARGUS

THESE DESIGNS AND SPECIFICATIONS ARE THE PROPERTY OF ARGUS TECHNOLOGIES AND SHALL NOT BE COPIED OR USED FOR MANUFACTURING WITHOUT ITS WRITTEN CONSENT.

DESIGN	RP	2007/3	MATERIAL
DRAWN	J.U.	2007/3	
CHECKED		2007/3	
APPROVED		2007/3	FINISH

TOLERANCES
X.X ±0.04" [X] ±1mm
X.XX ±0.02" [X.X] ±0.5mm
X.XXX ±0.01" [X.XX] ±0.25mm

FINISH: PER P.O. and Doc. 070-024-83

SCALE: N.T.S.

TITLE: OUTLINE, SHELF, 19" CMNT, 2RU, 3MDL, CXCI, DISTRN, 650W

ISSUE DATE

SHEET 1 OF 2

SIZE	TYPE	DWG NO.	REV
B	D2	030-727-06	A

REVISIONS				
LTR	DESCRIPTION	REV BY	DATE	APPD

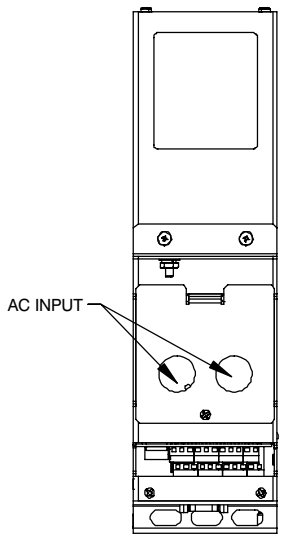

LEFT SIDE VIEW

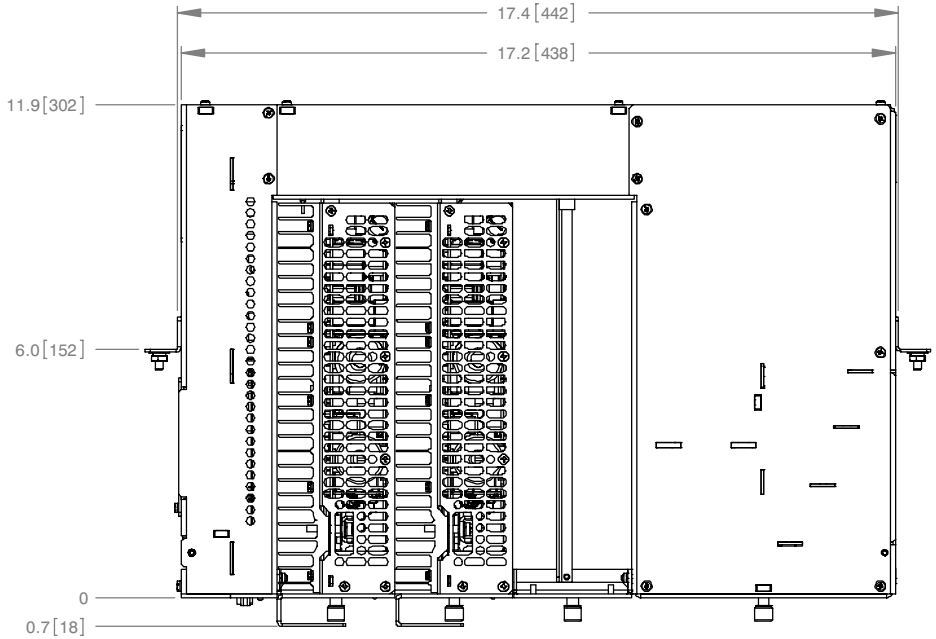

TOP VIEW

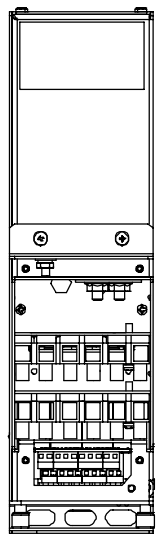

RIGHT SIDE VIEW

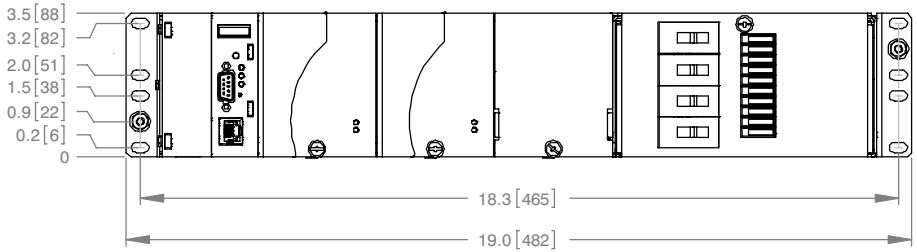

FRONT VIEW

© 2007 ARGUS TECHNOLOGIES

DIMENSIONS ARE IN INCHES WITH METRIC (mm) IN BRACKETS: INCHES [mm]

ARGUS

THESE DESIGNS AND SPECIFICATIONS ARE THE PROPERTY OF ARGUS TECHNOLOGIES AND SHALL NOT BE COPIED OR USED FOR MANUFACTURING WITHOUT ITS WRITTEN CONSENT.

MATERIAL: SEE SHEET 1	SCALE N.T.S.
TITLE OUTLINE, SHELF, 19" CMNT, 2RU, 3MDL, CXCI, DISTRN, 650W	
ISSUE DATE	SHEET 2 OF 2
SIZE B / TYPE D2 / DWG NO. 030-727-06	REV A

REVISIONS				
LTR	DESCRIPTION	REV BY	DATE	APPD
B	UPDATED NOTES	SDW	2008/01	JK

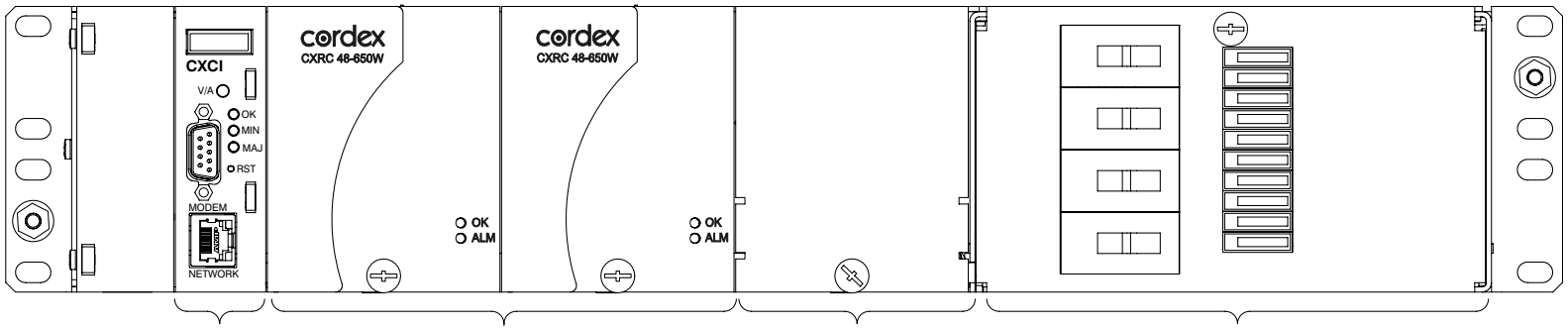

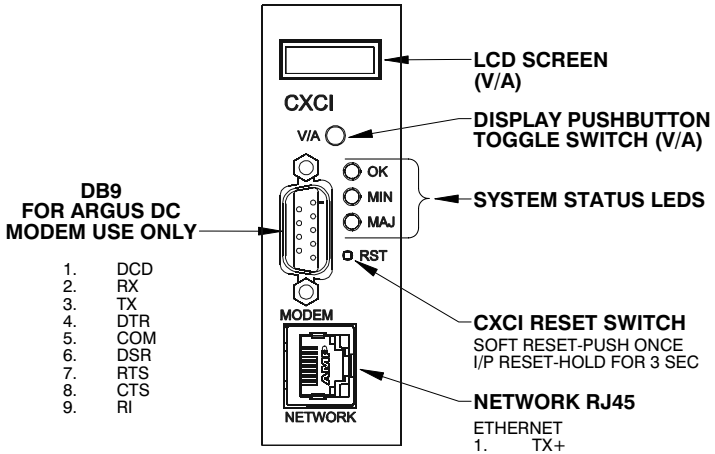

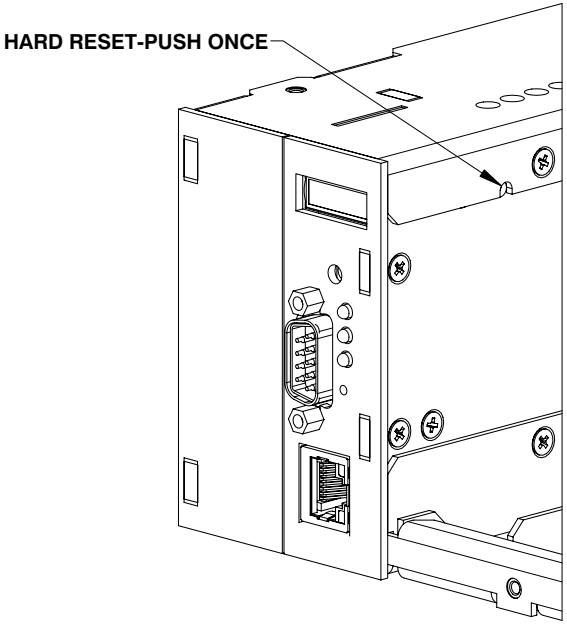

ARGUS

THESE DESIGNS AND SPECIFICATIONS ARE THE PROPERTY OF ARGUS TECHNOLOGIES AND SHALL NOT BE COPIED OR USED FOR MANUFACTURING WITHOUT ITS WRITTEN CONSENT.

DESIGN	RP	2007/03	MATERIAL
DRAWN	J.U.	2007/03	
CHECKED	RP	2007/03	
APPROVED	JK	2007/03	FINISH

TOLERANCES
X.X ±0.04" [X] ±1mm
X.XX ±0.02" [X.X] ±0.5mm
X.XXX ±0.01" [X.XX] ±0.25mm

FINISH: PER P.O. and Doc. 070-024-83

SCALE: N.T.S.

TITLE
CUST CONN, SHELF, 19" CMNT
2RU, 3MDL, CXCI, DISTRN, 650W

ISSUE DATE

SHEET 1 OF 2

SIZE	TYPE	DWG NO.	REV
B	D2	030-727-08	B

© 2007 ARGUS TECHNOLOGIES

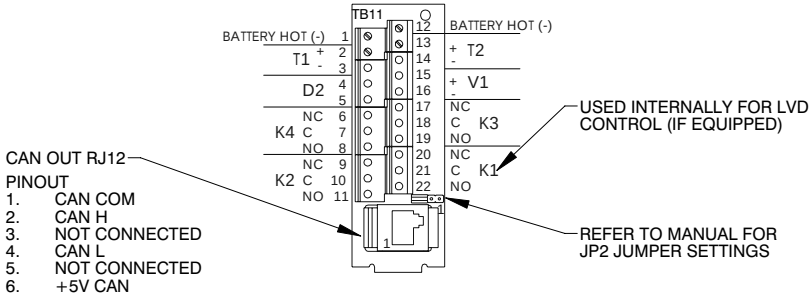

CXCI CUSTOMER CONNECTION PCB DETAIL

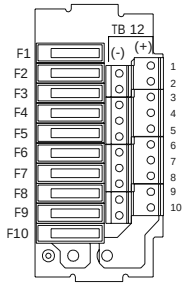

GMT FUSE PCB DETAIL

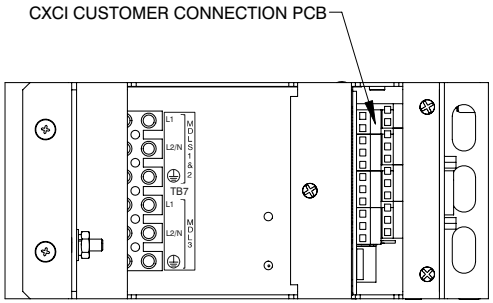

AC INPUT SIDE VIEW
PANEL REMOVED

DC OUTPUT TERMINALS
(MAX. WIRE GAUGE #6 AWG)

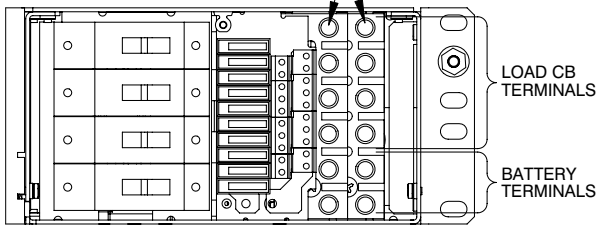

DISTRIBUTION FRONT VIEW
FRONT PANEL HIDDEN

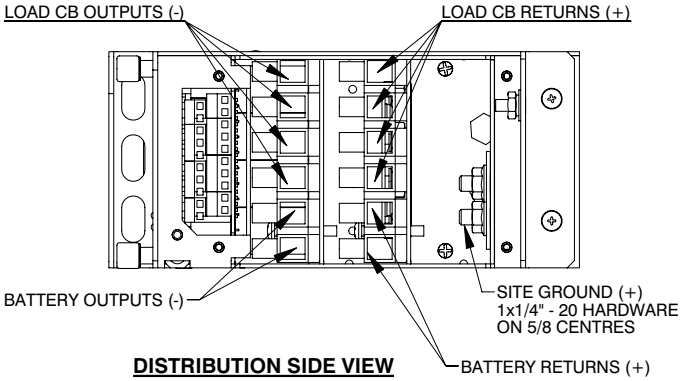

DISTRIBUTION SIDE VIEW

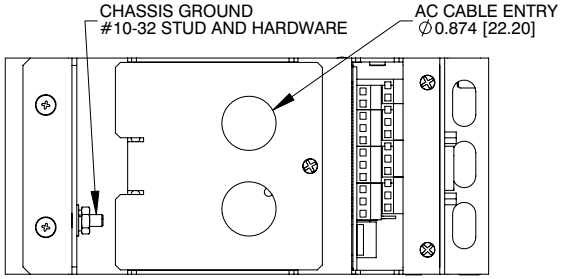

AC INPUT SIDE VIEW

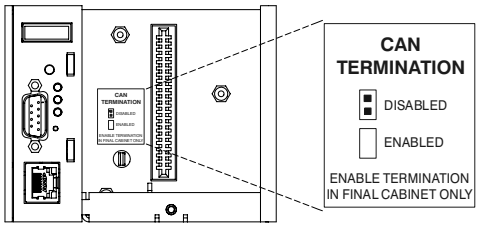

CAN TERMINATION JUMPER SETTING

© 2007 ARGUS TECHNOLOGIES

ARGUS

THESE DESIGNS AND SPECIFICATIONS ARE THE PROPERTY OF ARGUS TECHNOLOGIES AND SHALL NOT BE COPIED OR USED FOR MANUFACTURING WITHOUT ITS WRITTEN CONSENT.

MATERIAL: SEE SHEET 1	SCALE N.T.S.
TITLE CUST CONN, SHELF, 19" CMNT 2RU, 3MDL, CXCI, DISTRN, 650W	
ISSUE DATE	SHEET 2 OF 2
SIZE B / TYPE D2 / DWG NO. 030-727-08	REV B

Alpha Technologies Ltd.
7700 Riverfront Gate
Burnaby, BC V5J 5M4
Canada
Tel: +1 604 436 5900
Fax: +1 604 436 1233
Toll Free: +1 800 667 8743

Outback Power
5917 195th St NE,
Arlington, WA 98223
United States
Tel: +1 360 435 6030
Fax: +1 360 435 6019

Alpha Technologies Europe Ltd.
Twyford House Thorley
Bishop's Stortford
Hertfordshire, CM22 7PA
United Kingdom
Tel: +44 1279 501110
Fax: +44 1279 659870

Alpha Technologies
Suite 1903, 191F., Tower 1,
33 Canton Rd. Tsim Sha Tsui
China, Hong Kong City,
Kowloon, Hong Kong
Tel: +852 2736 8663
Fax: +852 2199 7988

Alpha Energy,
Alpha Technologies Inc.
3767 Alpha Way
Bellingham, WA 98226
United States
Tel: +1 360 647 2360
Fax: +1 360 671 4936

Alpha Technologies GmbH
Hansastrasse 8
D-91126
Schwabach, Germany
Tel: +49 9122 79889 0
Fax: +49 9122 79889 21

Alphatec Ltd.
339 St. Andrews St.
Suite 101 Andrea Chambers
P.O. Box 56468
3307 Limassol, Cyprus
Tel: +357 25 375 675
Fax: +357 25 359 595

Alpha Innovations Brasil
Rua Manuel Augusto
de Alvarenga, 155
São Paulo, SP - Brasil
Tel: +55 11 2476 0150
Fax: +55 11 2476 0150

Alpha Industrial Power Inc.
1075 Satellite Blvd NW,
Suite 400
Suwanee, GA 30024
United States
Tel: +1 678 475 3995
Fax: +1 678 584 9259

Alpha Technologies S.A.
131 Boulevard de l'Europe
1301 Wavre
Belgium
Tel: +32 10 438 510
Fax: +32 10 438 213

Alpha TEK ooo
Khokhlovskiy Pereulok 16
Stroenie 1, Office 403
Moscow, 109028
Russia
Tel: +7 495 916 1854
Fax: +7 495 916 1349

Alphatec Baltic
S. Konarskio Street 49-201
Vilnius, LT-03123
Lithuania
Tel: +370 5 210 5291
Fax: +370 5 210 5292

For technical support, contact Alpha Technologies:
Canada and USA: 1-888-462-7487
International: +1-604-436-5547

Visit us at www.alpha.ca

Power

Due to continuing product development, Alpha Technologies reserves the right to change specifications without notice.
Copyright © 2012 Alpha Technologies. All Rights Reserved. Alpha® is a registered trademark of Alpha Technologies.